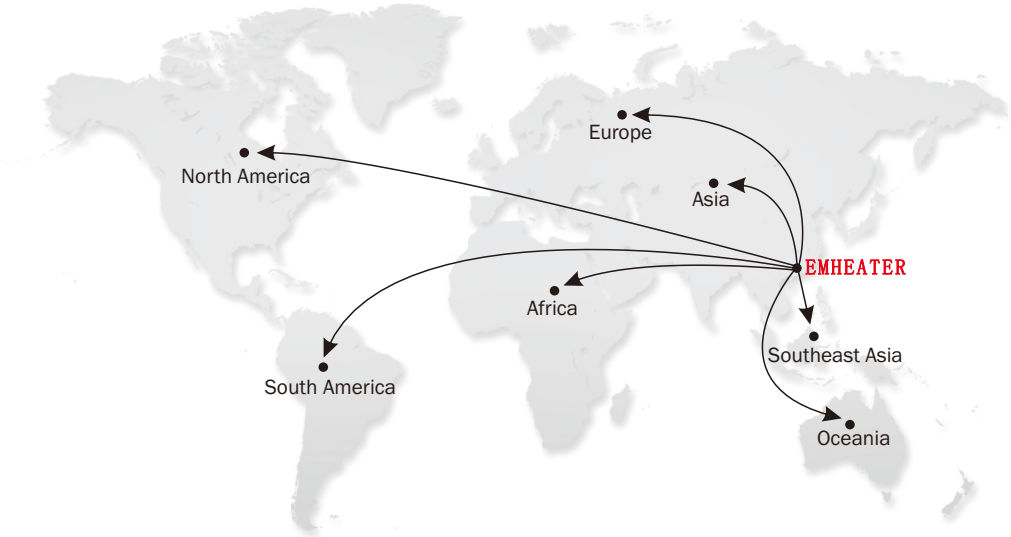

China EM Technology Limited

Address: No.80, Baomin 2 road, Xixiang, Bao'an District,Shenzhen ,China
Phone: 86-0755-29985851
Fax: 86-0755-29970305
Zip code: 518101
Website : www.emheater.com

EMHEATER

User's Manual

EM-GB Series Built-in Bypass Soft Starter

China EM Technology Limited

Preface

Thank you for purchasing the EM-GB series soft starter developed by China EM Technology Limited.
In this manual, the notices are graded based on the degree of danger:

Caution Statements cannot cover every potential cause of equipment damage but can highlight common causes of damage. It is the installer's responsibility to read and understand all instructions in this manual prior to installing, operating or maintaining the equipment, to follow good electrical practice including applying appropriate personal protective equipment and to seek advice before operating this equipment in a manner other than as described in this manual.

Warning

The unit should only be serviced by authorised service personnel. Unauthorised tampering with the unit will void the product warranty.
The voltages present in the following locations can cause severe electric shock and may be lethal:

- AC supply cables and connections
- Output cables and connections
- Many internal parts of the starter

The AC supply must be disconnected from the starter using an approved isolation device before any cover is removed from the starter or before any servicing work is performed.

WARNING–ELECTRICAL SHOCK RISK: The busbar and heatsink must be treated as live whenever the unit has mains voltage connected (including when the starter is tripped or waiting for a command).

SHORT CIRCUIT: The EM-GB is not short circuit proof. After severe overload or short circuit, the operation of the EM-GB should be fully tested by an authorised service agent.
GROUNDING AND BRANCH CIRCUIT PROTECTION: It is the responsibility of the user or person installing the EM-GB to provide proper grounding and branch circuit protection according to local electrical safety codes.
FOR YOUR SAFETY:

- The STOP function of the soft starter does not isolate dangerous voltages from the output of the starter. The soft starter must be disconnected by an approved electrical isolation device before accessing electrical connections.
- Soft starter protection features apply to motor protection only. It is the user’s responsibility to ensure safety of personnel operating machinery.
- The soft starter is a component designed for integration within an electrical system; it is therefore the responsibility of the system designer/user to ensure the system is safe and designed to comply with relevant local safety standards.

This user manual content may be changed due to technical reasons or modified. We reserve the updating right.

Table of Contents

1. EM-GB Series Soft starter

1.1 Soft starter overview

Soft starter overview:

This soft starter is an advanced digital soft starter solution for motors from 11kW to 600kW. Provides a complete range of motor and system protection features to ensure reliable performance even in the toughest installation environments.

1.2 Model Description

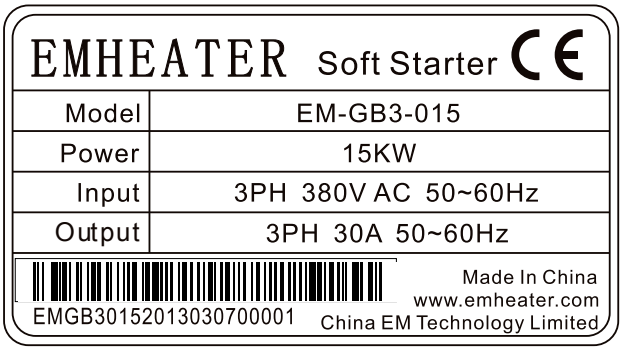

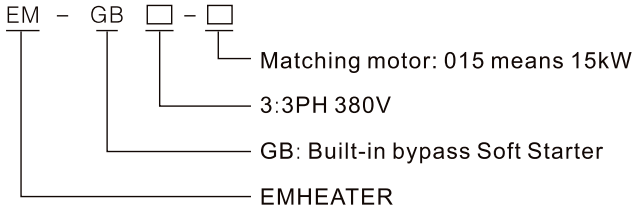

1.3 Specifications and Dimensions

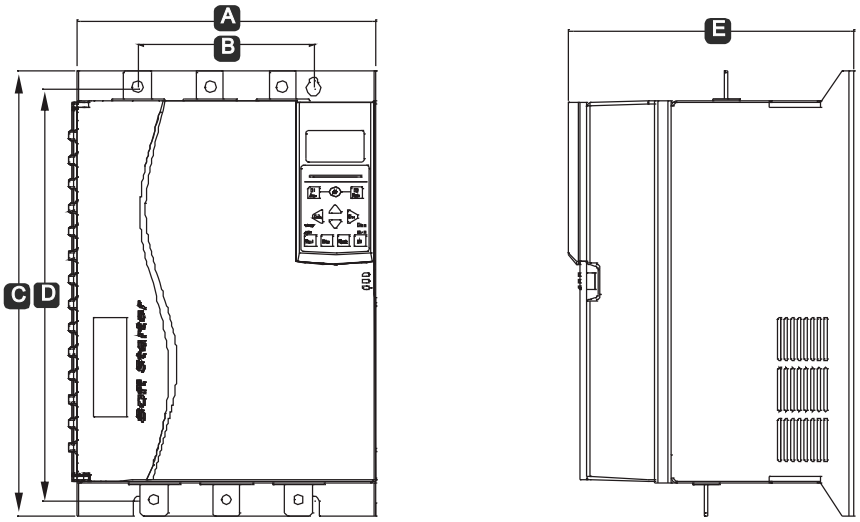

Model	Rated Power	Rated Current	Dimensions(mm)					N.W.
	(KW)	(A)	A	B	C	D	E	(Kg)
EM-GB-011	11	22	152	92	312	269	215	5.2
EM-GB-015	15	30						
EM-GB-018	18.5	37						

Model	Rated Power	Rated Current	Dimensions(mm)					N.W.
	(KW)	(A)	A	B	C	D	E	(Kg)
EM-GB-022	22	44						
EM-GB-030	30	60						
EM-GB-037	37	75						
EM-GB-045	45	90	152	92	312	269	215	5.2
EM-GB-055	55	110						
EM-GB-075	75	150						
EM-GB-090	90	180	275	160	410	390	265	18.3
EM-GB-115	115	230						
EM-GB-132	132	264						
EM-GB-160	160	320						
EM-GB-200	200	400						
EM-GB-250	250	500	443	320 160*2	600	540	290	35.8
EM-GB-280	280	560						
EM-GB-315	315	630						
EM-GB-355	355	710						

1.4 Feature List

Selectable soft starting profiles	**Customisable protection**	
Adaptive Control	Motor overload	Mains frequency
Constant Current	Excess Start Time	Input Trip
Current Ramp	Undercurrent	Motor thermistor
	Instantaneous overcurrent	Power circuit
	Current imbalance	Phase sequence
Selectable soft stopping profiles	**Models for all connection requirements**	
Coast To Stop	23 A~1000 A (nominal)	
Timed voltage ramp soft stop	380~415 VAC	
Adaptive Control	Internally bypassed	
Brake	In-line or inside delta connection	
Extensive input and output options	**Optional features for advanced applications**	
Remote control inputs (3 fixed, 2 programmable	Input/output expansion	
Relay outputs (1 fixed, 3 programmable)	RTD and Ground fault protection	
Analog output	Communication modules: Modbus, Modbus RTU	
Built-in PT100 RTD input		
Optional expansion cards		
Easy-to-read display with comprehensive feedback		
Removable keypad		
Multi-language feedback		
Date and time stamped event logging		
Operational counters (number of starts, hours-run, kWh)		
Performance monitoring (current, voltage, power factor, kWh)		
User-programmable monitoring screen		

2. Products Setup

2.1 Setup Procedure Overview

WARNING:Do not apply mains voltage to the starter until all wiring is complete.

1. Mount the soft starter (refer to Physical Installation in section 3.1 for details).
2. Connect control wiring (refer to Control Terminals in section 3.1 for details).
3. Apply control voltage to the starter.
4. Set the date and time (refer to Set Date and Time in section 6.2 for details).
5. Configure your application:
   1) Press "►" to open the Menu.
   2) Use "▼" to scroll to Quick Setup and press "►" to open the Quick Setup menu.
   3) Scroll through the list to find your application, then press "►" to begin the configuration process (refer to Quick Setup in section 8.4 for details).
6. If your application is not listed in Quick Setup:
   1) Press "◄" to return to the Menu.
   2) Use "▼" to scroll to Standard Menu and press "►".
   3) Scroll to Motor Data 1 and press "►", then press "►" again to edit parameter 1A Motor Full Load Current.
   4) Set parameter 1A to match the motor's full load current (FLC).

NOTE: For advanced applications, refer to Extended Menu in section 8.6 and Parameter Descriptions in section 8.8.

7. Close the Menu by pressing "◄" repeatedly.
8. (Optional) Use the built-in simulation tools to check that the control wiring is connected correctly (refer to Run Simulation in section 6.2).
9. Connect mains supply cables to starter input terminals 1/L1, 3/L2, 5/L3 (refer to Power Input and Output Configurations in section 3.8).
10. Connect the motor cables to starter output terminals 2/T1, 4/T2, 6/T3.

The soft starter is now ready to control the motor.

2.2 Testing the Installation

The EM-GB can be connected to a small motor for testing. During this test, the soft starter's control input and relay output protection settings can be tested. This test mode is not suitable for testing soft starting or soft stopping performance.

The FLC of the test motor must be at least 2% of the soft starter's minimum FLC.

NOTE: When testing the soft starter with a small motor, set parameter 1A Motor Full Load Current to the minimum allowable value

2.3 Simulation Tools

Software simulation functions let you test the soft starter's operation and control circuits without connecting the soft starter to mains voltage.

- The run simulation simulates a motor starting, running and stopping to confirm that the soft starter and associated equipment have been installed correctly. Refer to Run Simulation in section 6.2 for details.
- The protection simulation simulates activation of each protection mechanism to confirm that the soft starter and associated control circuits are responding correctly. Refer to Protection Simulation in section 6.2 for details.
- The output signal simulation simulates output signalling to confirm that outputs and associated control circuits are operating correctly. Refer to Output Signal Simulation in section 6.2 for details.

NOTE: Access to the simulation tools is protected by the security access code. The default access code is 0000.

3. Installation

3.1 Physical Installation

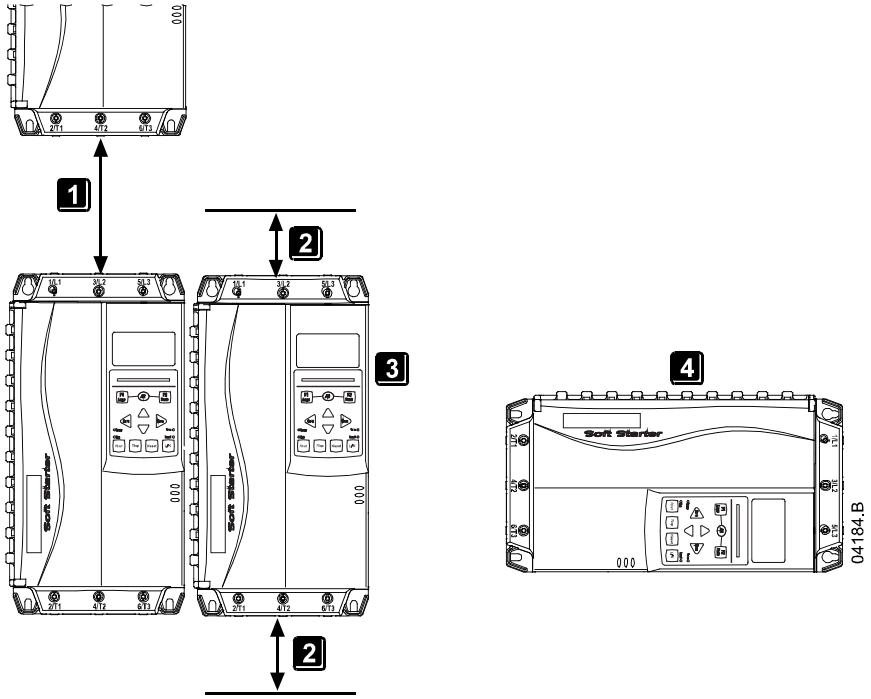

1	EM-GB-011~EM-GB-115: Allow 100mm between soft starters. EM-GB-132~EM-GB-355: Allow 200mm between soft starters.
2	EM-GB-011~EM-GB-115: Allow 50mm between the soft starter and solid surfaces EM-GB-132~EM-GB-355: Allow 200mm between the soft starter and solid surfaces.
3	Soft starters may be mounted side by side with no clearance (that is, if mounted without communications modules).
4	The soft starter may be mounted on its side. Derate the soft starter's rated current by 15%.

3.2 Control Terminals

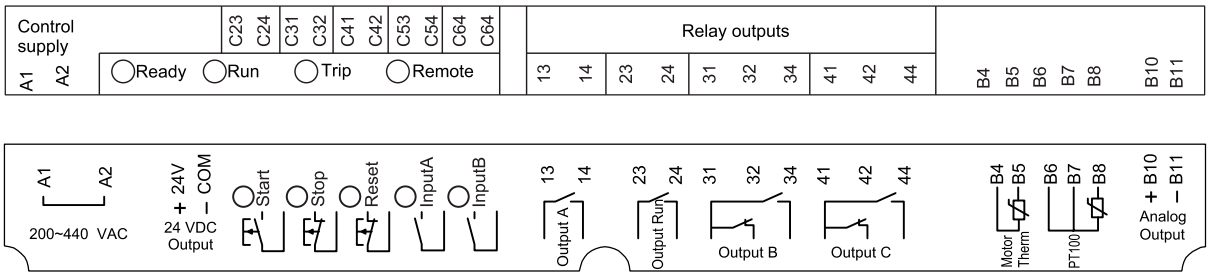

3.3 Control Voltage

C1 (220~440 VAC) A1, A2

3.4 Control Wiring

The EM-GB has three fixed inputs for remote control. These inputs should be controlled by contacts rated for low voltage, low current operation (gold flash or similar).

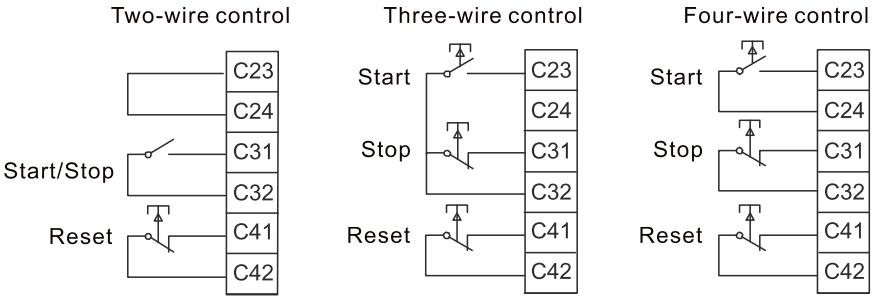

CAUTION

- The control inputs are powered by the soft starter. Do not apply external voltage to the control input terminals.
- Cables to the control inputs must be segregated from mains voltage and motor cabling.
- The reset input can be normally open or normally closed. Use parameter 6M to select the configuration.

3.5 Relay Outputs

The EM-GB provides four relay outputs, one fixed and three programmable.

The Run output closes when the soft start is complete (when the starting current falls below 120% of the programmed motor full load current) and remains closed until the beginning of a stop (either soft stop or coast to stop).

Operation of the programmable outputs is determined by the settings of parameters 7A~7I.

- If assigned to Main Contactor, the output activates as soon as the soft starter receives a start command and remains
- active while the soft starter is controlling the motor (until the motor starts a coast to stop, or until the end of a soft stop).
- If assigned to a trip function, the output activates when a trip occurs.
- If assigned to a flag, the output activates when the specified flag is active (parameters 7M~7O).

CAUTION

- Some electronic contactor coils are not suitable for direct switching with PCB mount relays. Consult the contactor manufacturer/supplier to confirm suitability.
- Three additional outputs are available on the input/output expansion card.

3.6 Motor Thermistors

Motor thermistors can be connected directly to the EM-GB. The soft starter will trip when the resistance of the thermistor circuit exceeds approximately 3.6 kΩ or falls below 20 Ω.

NOTE

- If no motor thermistors are connected to the EM-GB thermistor input terminals B4, B5 must be open. If B4, B5 are shorted, the EM-GB will trip.
- The thermistor circuit should be run in screened cable and must be electrically isolated from earth and all other power and control circuits.

3.7 Earth Terminals

Earth terminals are located at the back of the soft starter.

EM-GB-011~EM-GB-055 have one terminal on the input side (top).

EM-GB-075~EM-GB-355 have two terminals, one on the input side (top) and one on the output side (bottom).

3.8 Power Input and Output Configurations

The EM-GB has power inputs at the top of the unit and outputs at the bottom of the unit.

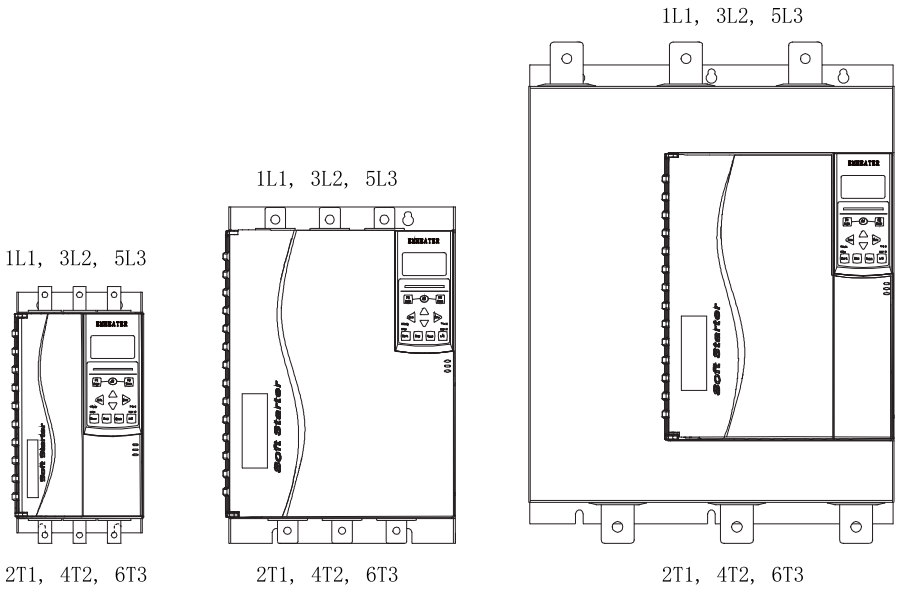

NOTE

- Some units use aluminium busbars. When connecting power terminations, we recommend cleaning the surface contact area thoroughly (using an emery or stainless steel brush) and using an appropriate jointing compound to prevent corrosion.
- Use only copper stranded or solid conductors, rated for 75 °C or higher.

3.9 Schematic Diagrams

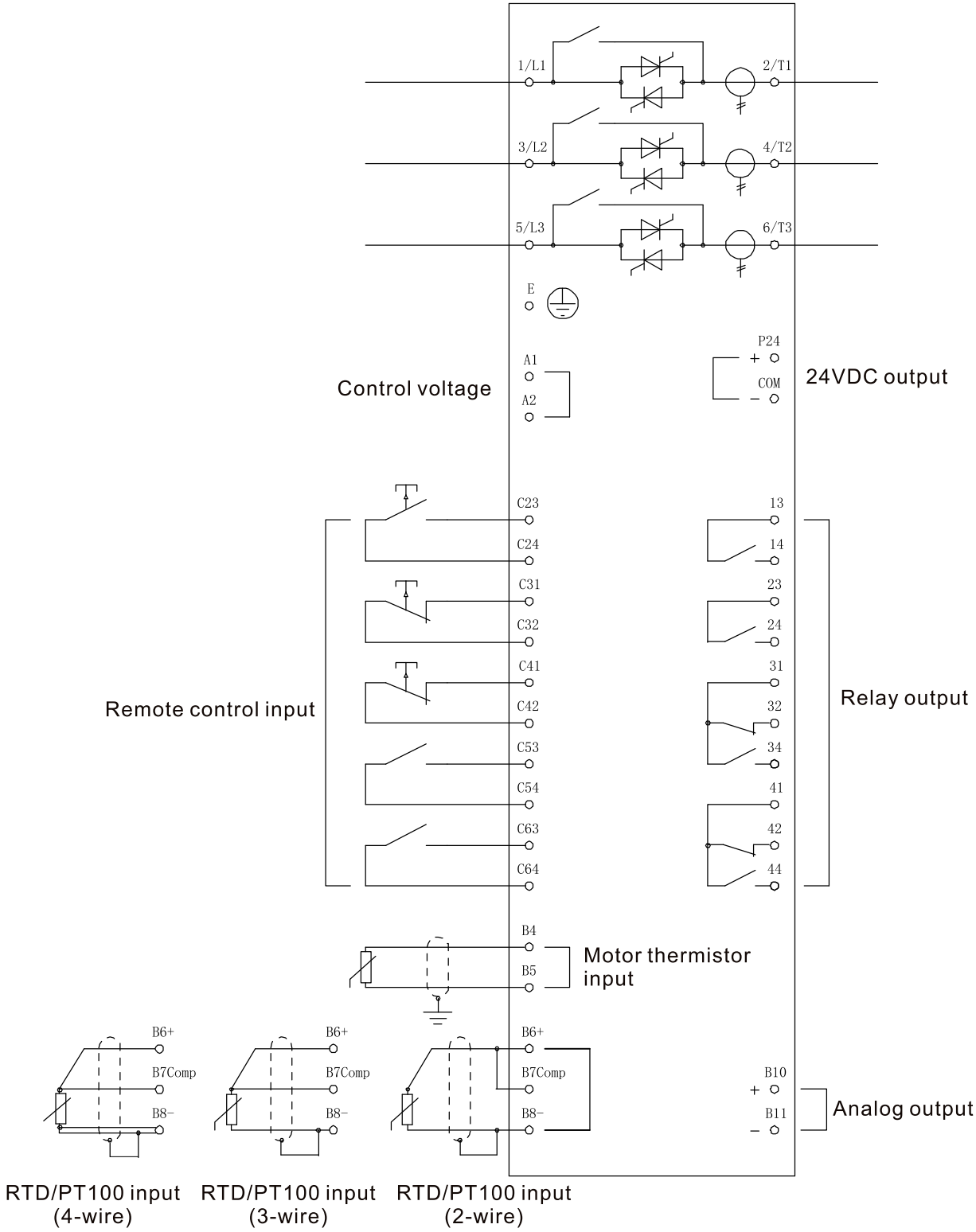

Control voltage: (220~440 VAC) A1, A2

NOTE:The current transformers are located on the output.

4. Power Circuits

4.1 Motor Connection

The EM-GB can be connected to the motor in-line or inside delta (also called three-wire and six-wire connection). When connecting in inside delta, enter the motor full load current (FLC) for parameter 1A. The EM-GB will automatically detect whether the motor is connected in-line or inside delta and will calculate the correct inside delta current level.

Models which are internally bypassed do not require an external bypass contactor.

In-line installation, internally bypassed

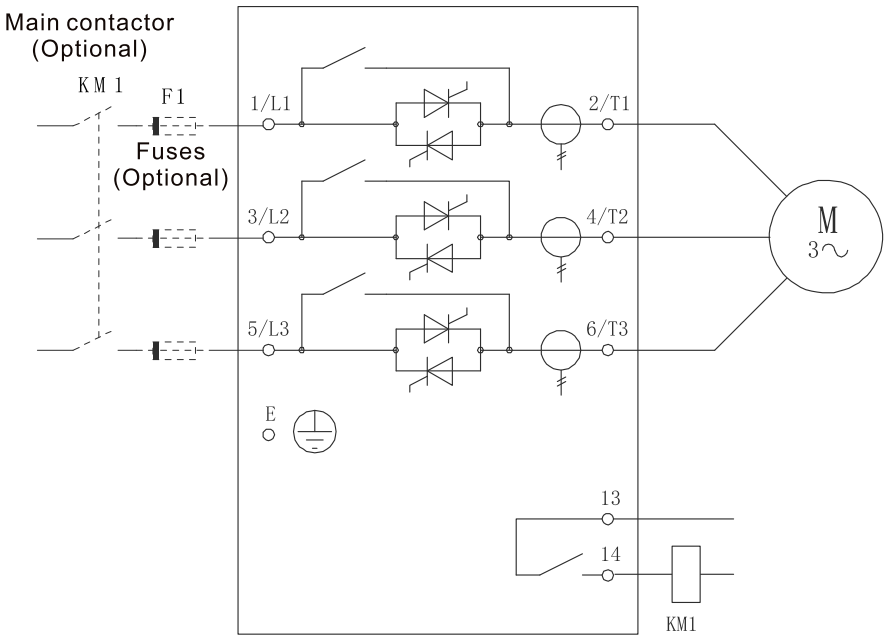

Inside delta installation, internally bypassed

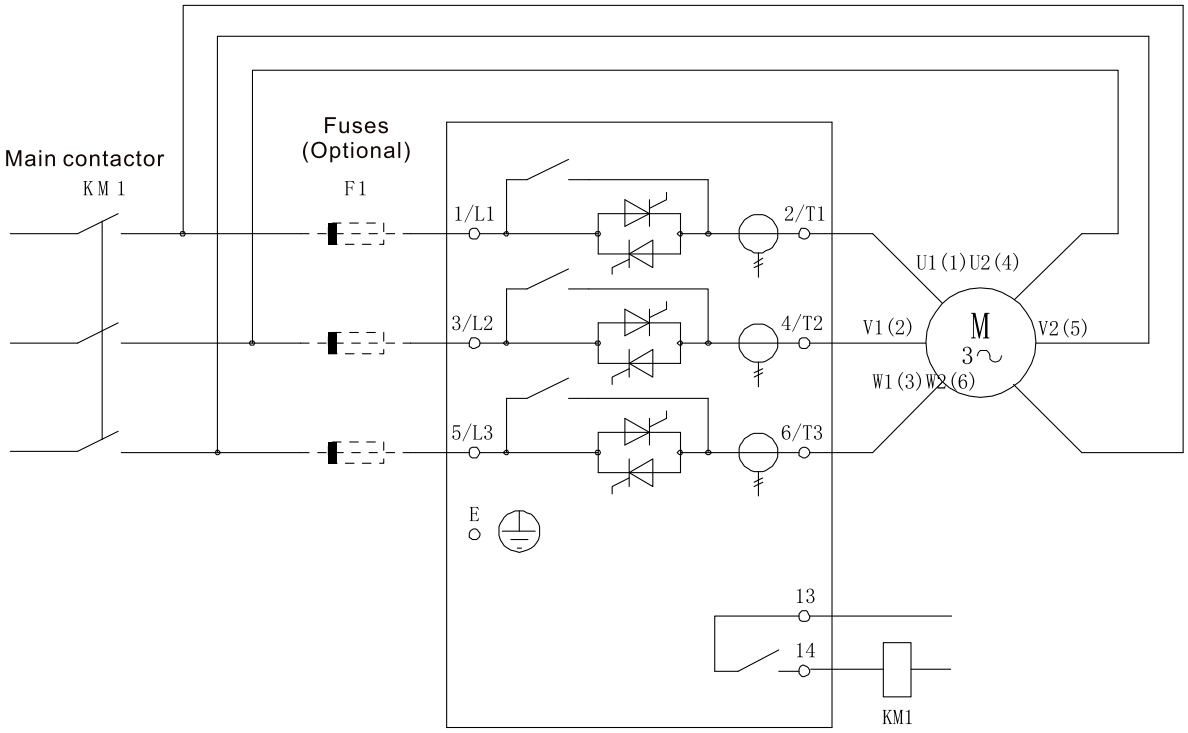

WARNING: When connecting the EM-GB in inside delta configuration, always install a main contactor or shunt trip circuit breaker.

NOTE: When connecting in inside delta, enter the motor full load current (FLC) for parameter 1A. The EM-GB will automatically detect whether the motor is connected in-line or inside delta and will calculate the correct inside delta current level.

4.2 Bypass Contactor

Some EM-GB soft starters are internally bypassed and do not require an external bypass contactor.
Non-bypassed soft starters may be installed with an external bypass contactor. Select a contactor with an AC3 rating greater than or equal to the full load current rating of the connected motor.

4.3 Circuit Breaker

A shunt trip circuit breaker may be used instead of a main contactor to isolate the motor circuit in the event of a soft starter trip. The shunt trip mechanism must be powered from the supply side of the circuit breaker or from a separate control supply.

4.4 Power Factor Correction

If power factor correction is used, a dedicated contactor should be used to switch in the capacitors.

CAUTION: Power factor correction capacitors must be connected to the input side of the soft starter. Connecting power factor correction capacitors to the output side will damage the soft starter.

5. Keypad and Feedback

5.1 Keypad Operation

The operating keypad stores a backup copy of the soft starter parameters so that multiple starters can be programmed using one operating keypad.

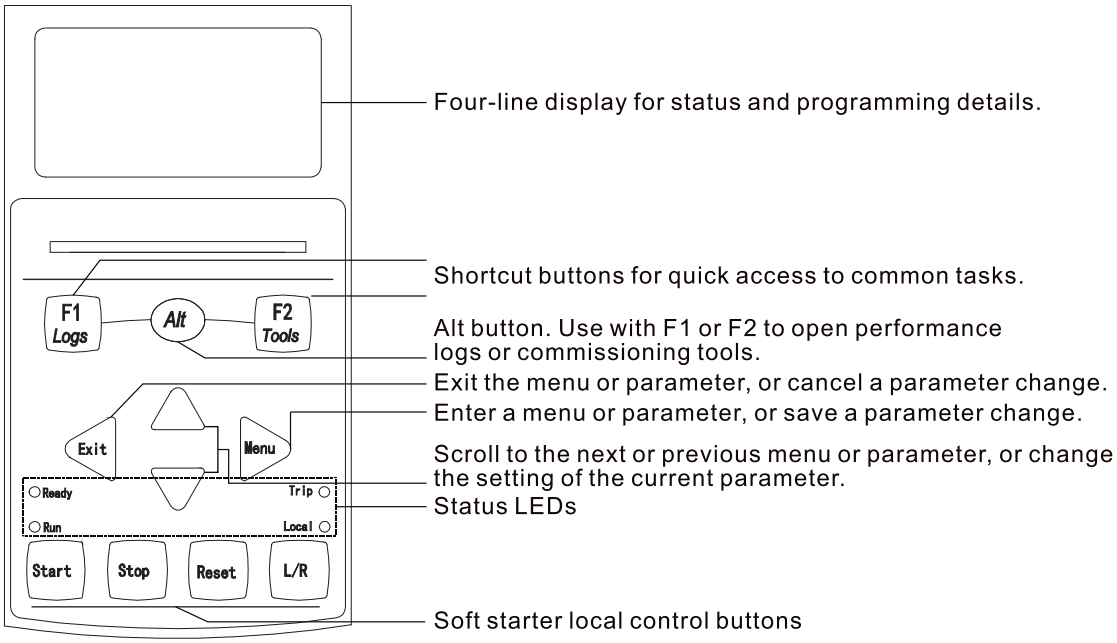

图 5.1

LED Name	On	Flashing
Ready	The motor is stopped and the starter is ready to start.	The motor is stopped and the starter is waiting for the Restart Delay (parameter 4M) or Motor Temperature Check (parameter 4N).
Run	The motor is in run state (receiving full voltage).	The motor is starting or stopping.
Trip	The starter has tripped.	The starter is in warning state.
Local	The starter is in Local control mode.	--

If the starter is in remote control mode, the Local LED will be off.

If all LEDs are off, the starter is not receiving control voltage.

- **Synchronising the Keypad and the Starter**

  When a keypad is connected to an EM-GB, it synchronises its parameter settings with the settings in the soft starter.

  Every time a different keypad is plugged into the starter, an acknowledgement is displayed.

  Select the required option using the "▲"and "▼" buttons. Press "►" to proceed with the selection.

  If any of the settings in the keypad are not valid for the starter, the keypad loads the default values

New Display Detected

Copy Parameters Display to Starter Starter to Display

5.2 Displays

The keypad displays a wide range of performance information about the soft starter. The top half of the screen shows real-time information on current or motor power (as selected in parameter 8D). Use the "▲" and "▼" buttons to select the information shown on the bottom half of the screen.

- Starter status
- Motor temperature
- Current
- Motor power
- Last start information
- Date and time
- SCR conduction

NOTE: Screens shown here are with the default settings.

Starter Status: The starter status screen shows details of the starter's operating status, motor temperature and motor power.

```
        Ready
M1 000%      000.0kW
```

Programmable screen: The EM-GB's user-programmable screen can be configured to show the most important information for the particular application. Use parameters 8E to 8H to select which information to display.

```
        Ready
0000 hrs      -   - %
```

Motor Temperature: The temperature screen shows which motor data set is in use, and the temperature of both motors as a percentage of total thermal capacity. If the EM-GB is configured for use on one motor, the temperature for the secondary motor (M2) will always show 0%.

```
   Primary Motor Set
M1 000%    M2    000%
```

Current: The current screen shows real-time line current on each phase. If the RTD/PT100 and ground fault protection card is fitted, the screen will also show ground current.

```
   Phase Currents
000.0A   000.0A   000.0A
```

Motor Power: The motor power screen shows motor power (kW, HP and kVA) and power factor.
The motor power figures are calculated using the Mains Reference Voltage (parameter 8N).

```
000.0kW       0000HP
0000kVA -.      - - pf
```

Last Start Information: The last start information screen shows details of the most recent successful start:

```
Last start          010s
350 % FLC      Temp 5%
```

- Start duration (seconds)
- Maximum start current drawn (as a percentage of motor full load current)
- Calculated rise in motor temperature

Date and Time: The date/time screen shows the current system date and time (24 hour format). For details on setting the date and time, refer to Set Date and Time in section 6.2.

Performance Graph: The performance graph provides a real-time display of operating performance. Use parameters 8I~8L to select which information to display.

000.0A	0-400%

SCR Conduction Bargraph: The SCR conduction bargraph shows the level of conduction on each phase.

6. Maintenance Tools

6.1 Testing the Installation

The EM-GB can be connected to a small motor for testing. During this test, the soft starter's control input and relay output protection settings can be tested. This test mode is not suitable for testing soft starting or soft stopping performance.

The FLC of the test motor must be at least 2% of the soft starter's minimum FLC.

NOTE: When testing the soft starter with a small motor, set parameter 1A Motor Full Load Current to the minimum allowable value.

6.2 Commissioning Menu (Tools)

The Commissioning Menu provides access to commissioning and testing tools. Press ALT then TOOLS to open the Tools.

To navigate through the Commissioning Menu

to scroll to the next or previous item, press the"▲" or "▼" button.
to open an item for viewing, press the "►" button.
to return to the previous level, press the "◄" button.
to close the Commissioning Menu, press "◄" repeatedly.

Set Date and Time

1. Press ALT then TOOLS to open the Tools.
2. Scroll to the date/time screen.
3. Press the "►" button to enter edit mode.
4. Press the "►" and "◄" buttons to select which part of the date or time to edit.
5. Use the "▲" and "▼" buttons to change the value.
6. To save changes, press the "►" button. The EM-GB will confirm the changes. To cancel changes, press the "◄" button.

Simulation Tools

Software simulation functions let you test the soft starter's operation and control circuits without connecting the soft starter to mains voltage.

The EM-GB has three simulation modes:

- The run simulation simulates a motor starting, running and stopping to confirm that the soft starter and associated equipment have been installed correctly.
- The protection simulation simulates activation of each protection mechanism to confirm that the soft starter and associated control circuits are responding correctly.
- The output signal simulation simulates output signalling to confirm that outputs and associated control circuits are operating correctly.

The simulation tools are accessed via the Commissioning Menu. The simulations are only available when the soft starter is in Ready state, control voltage is available and the keypad is active.

NOTE: Access to the simulation tools is protected by the security access code. The default access code is 0000.

Run Simulation

You can end the simulation at any time by pressing EXIT.

To use the run simulation:

1. Press ALT then TOOLS to open the Tools.
2. Scroll to Run Simulation and press "►".
3. Press START or activate the start input. The EM-GB simulates its pre-start checks and closes the main contactor relay. The Run LED flashes.

NOTE: If mains voltage is connected, an error message is shown.

Remove mains voltage and proceed to the next step.

4. Press "►" The EM-GB simulates starting. The Run LED flashes.
5. Press "►" The EM-GB simulates running. The Run LED stays on without flashing and the bypass contactor relay closes.
6. Press STOP or activate the stop input. The EM-GB simulates stopping. The Run LED flashes and the bypass contactor relay opens.
7. Press "►" The Ready LED flashes and the main contactor relay opens.
8. Press "►" to return to the commissioning menu.

Run Simulation
Ready
Apply Start Signal

Run Simulation
Pre-Start Checks
STORE to Continue

Run Simulation
ATTENTION!
Remove Mains Volts
STORE to Continue

Run Simulation
Starting X:XXs
STORE to Continue

Run Simulation
Running
Apply Stop Signal

Run Simulation
Stopping X:XXs
STORE to Continue

Run Simulation
Stopped
STORE to Continue

Protection Simulation

The protection simulation simulates activation of each protection mechanism to confirm that the soft starter and associated control circuits are responding correctly.

To use the protection simulation:

1. Press ALT then Tool to open the Tools.
2. Scroll to Protection Simulation and press "►".
3. Use the "▲" and "▼" buttons to select the protection you want to simulate.
4. Press and hold "►" to simulate the selected protection.
5. The screen is displayed momentarily. The soft starter's response depends on the Protection Action setting (parameter group 16).
6. Use "▲" or "▼" to select another simulation, or press "◄" to exit.

0.0A
Tripped
Selected Protection

NOTE:

- If the protection trips the soft starter, reset before simulating another protection. If the protection action is set to 'Warn and Log', no reset is required.

- If the protection is set to 'Warn and Log', the warning message can be viewed only while the button is pressed.
- If the protection is set to 'Log only', nothing appears on the screen but an entry will appear in the log.

Output Signal Simulation

The output signal simulation simulates output signalling to confirm that outputs and associated control circuits are operating correctly.

NOTE: To test operation of the flags (motor temperature and low/high current), set an output relay to the appropriate function and monitor the relay's behaviour.

To use the output signal simulation:

1. Press ALT then TOOLS to open the Tools.
2. Scroll to Output Signalling Simulation and press"►".
3. Use the "▲" and "▼" buttons to select a function to simulate, then press "►"" .
4. Use the "▲" and "▼" buttons to turn the signal on and off. To confirm correct operation, monitor the state of the output.
5. Press "◄" to return to the simulation list.

```
Prog Relay A
Off
On
```

Analog Output Simulation

The analog output simulation uses the "▲" and "▼" buttons to change the current at the analog output terminals.

Attach a current measuring device to the analog output terminals. Use the "▲" or "▼" button to adjust the percentage value on the display. The current measuring device should indicate the same level of current as shown on the display.

If the input/output expansion card is fitted, the simulation can also be used to test the operation of Relays D, E, F and Analog Output B.

```
Analog Output A
0%
4.0mA
```

Temperature Sensors State

This screen shows the state of the motor thermistors and RTD/PT100s.

S = Short

H = Hot

C = Cold

O = Open

RTD/PT100s B ~ G are only available if the RTD/PT100 and Ground Fault expansion card is fitted.

```
Temp Sensors State
Thermistor: O
RTD/PT100s:0000000
S=Shrt  H=Hot  C=Cld  O=Opn
```

Digital I/O State

This screen shows the current status of the digital inputs and outputs.

The top line of the screen shows the start, stop, reset and programmable inputs (A and B, then inputs on the I/O expansion card (if fitted).

The bottom line of the screen shows programmable output A, the fixed Run output, programmable outputs B and C, then the outputs on the expansion card (if fitted).

```
Digital I/O State
Input:    0110000
Output: 0000100
```

Analog I/O State

This screen shows the current status of the Analog I/O.

This screen will also show Analog Output B if the expansion card is fitted.

```
Analog I/O State
Input: - - - - %
Output A: 04.0mA
```

Reset Thermal Models

The soft starter's thermal modelling software constantly monitors the motor's performance. This allows the starter to calculate the motor's temperature and ability to start successfully at any time. If the EM-GB is configured for use on two motors, each motor's temperature is modelled separately.

```
Reset Thermal Models
M1 X%
M2 X%
► to Reset
```

```
Do Not Reset
Reset
```

The thermal model for the active motor can be reset if required.

1. Press ALT then TOOLS to open the Tools.
2. Scroll to Reset Thermal Models and press "►".
3. Use "▼" to select Reset and press STORE to confirm.
4. When the thermal model has been reset, the screen will display a confirmation message then return to the previous screen.

CAUTION: Resetting the motor thermal model will compromise thermal model protection and may compromise motor life. Only reset the thermal model in an emergency.

6.3 Logs Menu

The Logs Menu provides information on events, trips and starter performance.

Press ALT then LOGS to open the Logs.

To navigate through the Logs Menu:

- to open a log, press the "►" button.
- to scroll through the entries in each log, press the "▲" and "▼" buttons.

- to view details of a log entry, press the "►" button.
- to return to the previous level, press the "◄" button.
- to close the Logs Menu, press repeatedly.

The Logs Menu can only be opened while viewing the monitoring screens

Trip Log

The Trip Log stores details of the eight most recent trips, including the date and time the trip happened. Trip 1 is the most recent and trip 8 is the oldest stored trip.

To open the Trip Log:

1. Press ALT then LOGS to open the Logs.
2. Scroll to Trip Log and press "►" .
3. Use the "▲" and "▼" buttons to select a trip to view, and press "►" to display details.

To close the log and return to the main display, press "◄" repeatedly.

Event Log

The Event Log stores time-stamped details of the starter's 99 most recent events (actions, warnings and trips), including the date and time of the event. Event 1 is the most recent and event 99 is the oldest stored event.

To open the Event Log:

1. Press ALT then F1(LOGS) to open the Logs.
2. Scroll to Event Log and press "►" .
3. Use the "▲" and "▼" buttons to select an event to view, and press "►" to display details.

To close the log and return to the main display, press "◄" repeatedly.

Performance Counters

The performance counters store statistics on the starter's operation:

- Hours run (lifetime and since counter last reset)
- Number of starts (lifetime and since counter last reset)
- Motor kWh (lifetime and since counter last reset)
- Number of times the thermal model has been reset

The resettable counters (hours run, starts and motor kWh) can only be reset if the Adjustment Lock (parameter 15B) is set to Read & Write.

To view the counters:

1. Press ALT then F1(LOGS) to open the Logs.
2. Scroll to counters and press "►" .
3. Use the "▲" and "▼" buttons to scroll through the counters. Press "►" to view details.
4. To reset a counter, press "►" then use the "▲" and "▼" buttons to select Reset/Do Not Reset. Press STORE to confirm the action.

To close the counter and return to the Logs Menu, press "►".

7. Operation

7.1 Priority of Commands

Starter Disable overrides any other control command. Refer to parameter 6A Input A Function.

Emergency Run overrides normal control commands, including auto-start/stop. Refer to parameter 15C Emergency Run.

Auto-start/stop overrides normal control commands (local, remote or via serial communications). Refer to 3 Auto-Start/Stop in section 8.8.

7.2 Start, Stop and Reset Commands

The soft starter can be controlled in three ways:

- using the buttons on the keypad
- via remote inputs
- via a serial communication link

The LCL/RMT button controls whether the EM-GB will respond to local control (via the keypad) or remote control (via the remote inputs).

- The Local LED on the keypad is on when the soft starter is in local control mode and off when the soft starter is in remote control mode.
- The Remote LED on the EM-GB is on when the soft starter is in Remote mode and off when in Local mode. The Remote LED is located on the main body of the starter (behind the keypad) and is only visible if the keypad is remotely mounted.

Control via the fieldbus communication network is always enabled in local control mode, and can be enabled or disabled in remote control mode (parameter 6R Comms in Remote). Control via the serial communication network requires an optional communication module

The STOP button on the keypad is always enabled

Using the Soft Starter to Control a Motor

To soft start the motor, press the START button on the keypad or activate the Start remote input. The motor will start using the start mode selected in parameter 2A.

To stop the motor, press the STOP button on the keypad or activate the Stop remote input. The motor will stop using the stop mode selected in parameter 2H.

To reset a trip on the soft starter, press the RESET button on the keypad or activate the Reset remote input.

To stop the motor with a coast to stop, regardless of the setting of parameter 2H Stop Mode, press the local STOP and RESET buttons at the same time. The soft starter will remove power from the motor and open the main contactor, and the motor will coast to stop.

Auto-Start/Stop

The EM-GB can also be configured to auto-start or auto-stop. Auto-start/stop operation is only available in Remote mode. In Local mode, the starter will ignore any auto-start/stop setting. To configure auto-start/stop operation, use parameters 3A~3D.

7.3 Soft Start Methods

Soft starters offer a variety of methods to control motor starting. Each soft start method uses a different primary control parameter.

Soft Start Method	Parameter Controlled	Performance Parameters Influenced
Timed Voltage Ramp	Voltage	Start current, start torque, acceleration
Constant Current	Current	Start torque, acceleration
Torque Control	Torque	Start current, acceleration
Adaptive Control	Acceleration	Start current, start torque

Best results are obtained by selecting the soft start method that directly controls the parameter of most importance for the application. Typically soft starters are used to limit motor start current or control load acceleration and/or deceleration. The EM-GB can be set to either Constant Current or Adaptive Control.

To Control	Use
Motor Start Current	Constant Current
Motor/Load Acceleration	Adaptive Control

Constant Current

Constant current is the traditional form of soft starting, which raises the current from zero to a specified level and keeps the current stable at that level until the motor has accelerated.

Constant current starting is ideal for applications where the start current must be kept below a particular level.

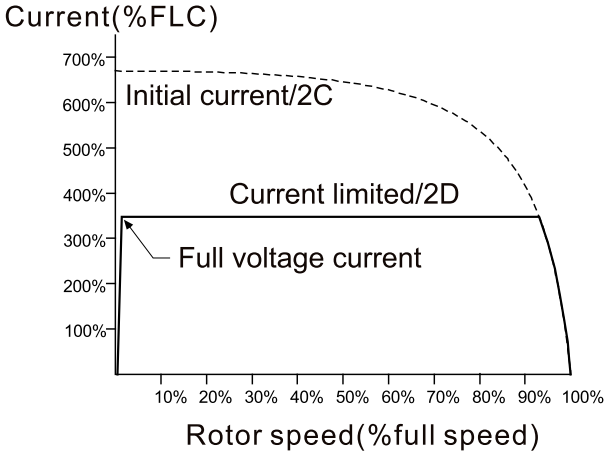

Current Ramp

Current ramp soft starting raises the current from a specified starting level (1) to a maximum limit (3), over an extended period of time (2).

Current ramp starting can be useful for applications where:

- the load can vary between starts (for example a conveyor which may start loaded or unloaded). Set the initial current (parameter 2C) to a level that will start the motor with a light load, and the current limit (parameter 2D) to a level that will start the motor with a heavy load.
- the load breaks away easily, but starting time needs to be extended (for example a centrifugal pump where pipeline pressure needs to build up slowly).
- the electricity supply is limited (for example a generator set), and a slower application of load will allow greater time for the supply to respond.

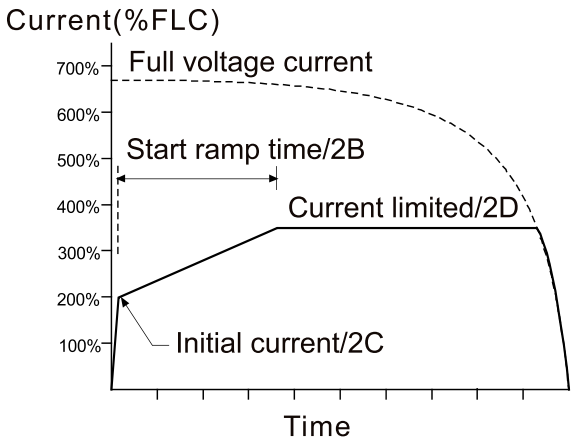

Adaptive Control for Starting

In an adaptive control soft start, the EM-GB adjusts the current in order to start the motor within a specified time and using a selected acceleration profile

CAUTION:Adaptive Control cannot start the motor faster than a direct on-line (DOL) start. If the start ramp time (parameter 2B) is shorter than the motor's DOL start time, starting current may reach DOL levels.

Every application has a particular starting profile, based on characteristics of the load and the motor. Adaptive Control offers three different starting profiles, to suit the requirements of different applications. Selecting a profile that matches the inherent profile of the application can help smooth out acceleration across the full start time. Selecting a dramatically different Adaptive Control profile can somewhat neutralise the inherent profile.

The EM-GB monitors the motor's performance during each start, to improve control for future soft starts.

- **Adaptive Control**

To use Adaptive Control to control starting performance:

1. Select Adaptive Control from the Start Mode menu (parameter 2A)
2. Set the desired Start Ramp Time (parameter 2B)
3. Select the desired Adaptive Start Profile (parameter 2E)
4. Set a start Current Limit (parameter 2D) sufficiently high to allow a successful start. The first Adaptive Control start will be a Constant Current start. This allows the EM-GB to learn the characteristics of the connected motor. This motor data is used by the EM-GB during subsequent Adaptive Control starts.

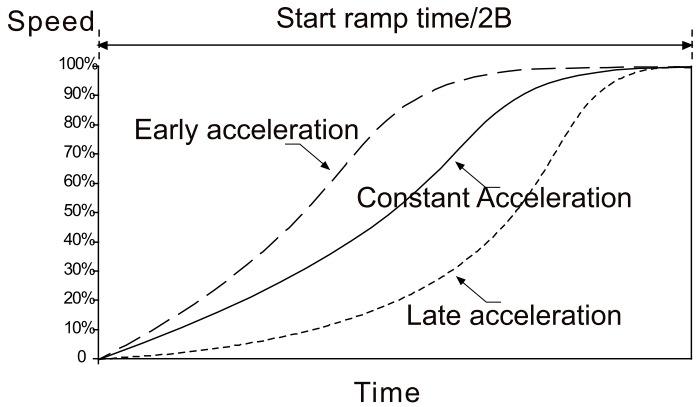

NOTE:

- Adaptive Control will control the load according to the programmed profile. Start current will vary according to the selected acceleration profile and the programmed start time.
- If replacing a motor connected to an EM-GB programmed for Adaptive Control starting or stopping, or if the starter has been tested on a different motor prior to actual installation, the starter will need to learn the characteristics of the new motor. The EM-GB will automatically re-learn the motor's characteristics if parameter 1A Motor Full Load Current or parameter 2K Adaptive Control Gain is changed.

- **How to Select the Adaptive Control Start Profile**

The best profile will depend on the exact details of each application.
Some loads, such as submersible pumps, should not be run at slow speeds. An early acceleration profile will raise the speed quickly, then control acceleration through the rest of the start.

CAUTION: Adaptive Control controls the motor's speed profile, within the programmed time limit. This may result in a higher level of current than traditional control methods.

Fine-tuning Adaptive Control

If the motor does not start or stop smoothly, adjust the adaptive control gain (parameter 2K). The gain setting determines how much the EM-GB will adjust future adaptive control starts and stops, based on information from the previous start. The gain setting affects both starting and stopping performance.

- If the motor accelerates or decelerates too quickly at the end of a start or stop, increase the gain setting by 5%~10%.
- If the motor speed fluctuates during starting or stopping, decrease the gain setting slightly.

NOTE: Changing the gain setting resets the starter's adaptive control learning. The first start after changing the gain will use constant current.

Kickstart

Kickstart provides a short boost of extra torque at the beginning of a start, and can be used in conjunction with current ramp or constant current starting.
Kickstart can be useful to help start loads that require high breakaway torque but then accelerate easily (for example helical rotor pumps).

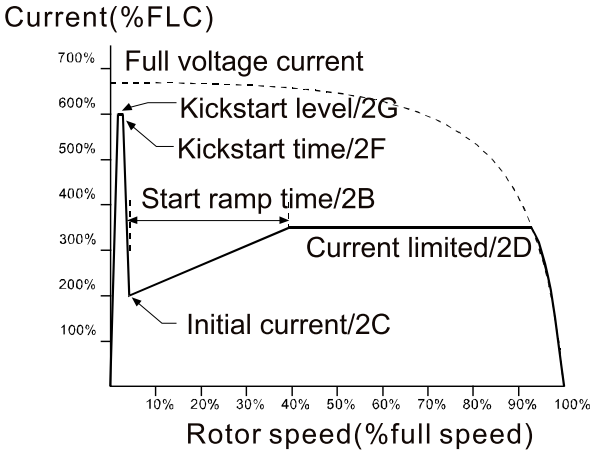

7.4 Stop Methods

Soft starters offer a variety of methods for the control of motor stopping.

Stop Method	Performance Result
Coast To Stop	Natural load run down
TVR Soft Stop	Extended run down time
Adaptive Control	Extended run down time according to selected deceleration profile
Brake	Reduced run down time

Soft starters are often used in pumping applications to eliminate the damaging effects of fluid hammer. Adaptive Control should be the preferred stop method for these applications.

Coast to Stop

Coast to stop lets the motor slow at its natural rate, with no control from the soft starter. The time required to stop will depend on the type of load.

TVR Soft Stop

Timed voltage ramp reduces the voltage to the motor gradually over a defined time. The load may continue to run after the stop ramp is complete.

Timed voltage ramp stopping can be useful for applications where the stop time needs to be extended, or to avoid transients on generator set supplies.

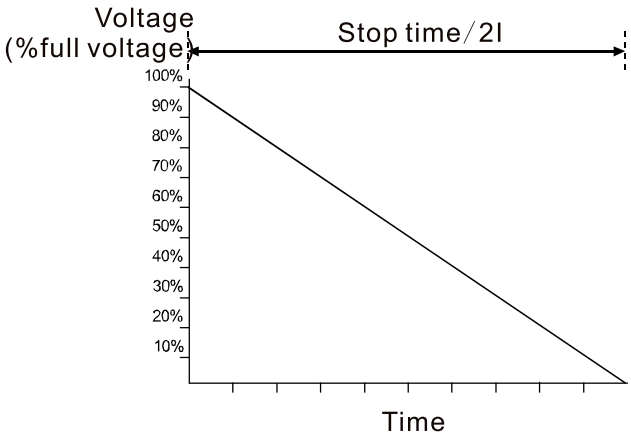

Adaptive Control for Stopping

In an adaptive control soft stop, the EM-GB controls the current in order to stop the motor within a specified time and using a selected deceleration profile. Adaptive Control can be useful in extending the

stopping time of low inertia loads.

Every application has a particular stopping profile, based on characteristics of the load and the motor. Adaptive Control offers three different stopping profiles. Choose the adaptive control profile that best matches your application requirements.

NOTE: Adaptive control does not actively slow the motor down and will not stop the motor faster than a coast to stop. To shorten the stopping time of high inertia loads, use brake.

CAUTION: Adaptive Control controls the motor's speed profile, within the programmed time limit. This may result in a higher level of current than traditional control methods.

Adaptive Control

To use Adaptive Control to control stopping performance:

1. Select Adaptive Control from the Stop Mode menu (parameter 2H)
2. Set the desired Stop Time (parameter 2I)
3. Select the required Adaptive Stop Profile (parameter 2J)

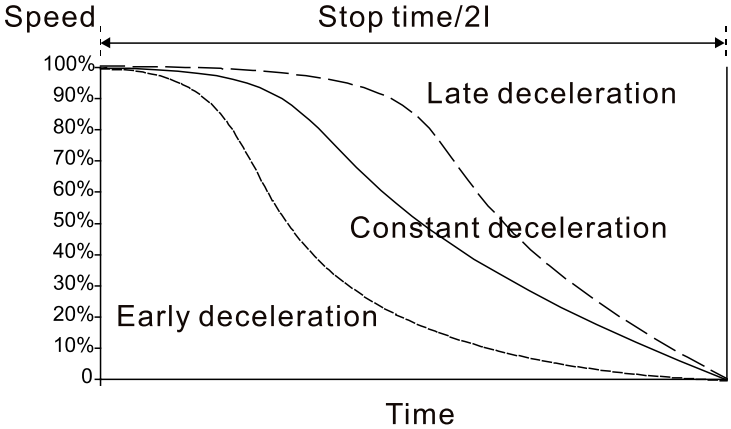

The first Adaptive Control stop will be a normal soft stop. This allows the EM-GB to learn the characteristics of the connected motor. This motor data is used by the EM-GB during subsequent Adaptive Control stops.

NOTE:

- Adaptive Control will control the load according to the programmed profile. Stopping current will vary according to the selected deceleration profile and stop time.
- If replacing a motor connected to an EM-GB programmed for Adaptive Control starting or stopping, or if the starter has been tested on a different motor prior to actual installation, the starter will need to learn the characteristics of the new motor. The EM-GB will automatically re-learn the motor's characteristics if parameter 1A Motor Full Load Current or parameter 2K Adaptive Control Gain is changed.

1. Pump stopping

The hydraulic characteristics of pump systems vary considerably. This variation means the ideal deceleration profile and stop time will vary from application to application. The table provides guidelines

on selecting between Adaptive Control deceleration profiles, but we recommend testing the three profiles to identify the best profile for the application.

Adaptive Stop Profile	Application
Late Deceleration	High head systems where even a small decrease in motor/pump speed results in a rapid transition between forward flow and reverse flow.
Constant Deceleration	Low to medium head, high flow applications where the fluid has high moment
Early Deceleration	Open pump systems where fluid must drain back through the pump without driving the pump in reverse.

2. Brake

Brake reduces the time required to stop the motor.

During braking an increased noise level from the motor may be audible. This is a normal part of motor braking.

When brake is selected, the EM-GB uses DC injection to slow the motor.

EM-GB braking:

- Does not require the use of a DC brake contactor
- Controls all three phases so that the braking currents and associated heating are evenly distributed through the motor.

CAUTION:

- If the brake torque is set too high, the motor will stop before the end of the brake time and the motor will suffer unnecessary heating which could result in damage. Careful configuration is required to ensure safe operation of the starter and motor.
- A high brake torque setting can result in peak currents up to motor DOL being drawn while the motor is stopping. Ensure protection fuses installed in the motor branch circuit are selected appropriately.
- Brake operation causes the motor to heat faster than the rate calculated by the motor thermal model. If you are using brake, install a motor thermistor or allow sufficient restart delay (parameter 4M).

Braking has two stages:

- Pre-brake: provides an intermediate level of braking to slow motor speed to a point where full brake can be operated successfully (approximately 70% speed).
- Full brake: brake provides maximum braking torque but is ineffective at speeds greater than approximately 70%.

To configure the EM-GB for brake operation:

1. Set parameter 2I for the desired stopping time duration (1). This is the total braking time and must be set sufficiently longer than the brake time (parameter 2M) to allow the pre-braking stage to reduce motor speed to approximately 70%. If the stop time is too short, braking will not be successful and the motor will coast to stop.
2. Set Brake Time (parameter 2M) to approximately one quarter of the programmed Stop Time. This sets the time for the Full Brake stage (2).
3. Adjust the Brake Torque (parameter 2L) so that the desired stopping performance is achieved. If set too low, the motor will not stop completely and will coast to stop by the end of the braking period.

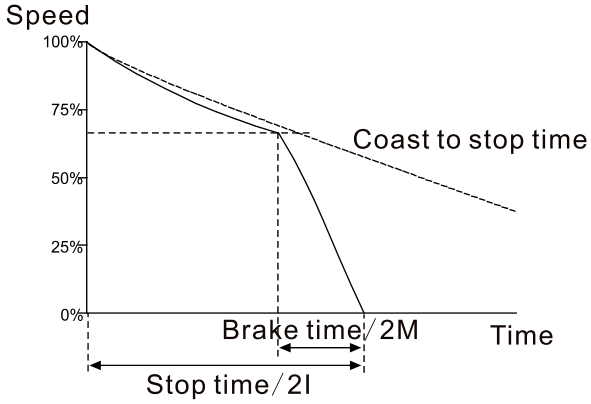

CAUTION:

- When using DC brake, the mains supply must be connected to the soft starter (input terminals L1, L2, L3) in positive phase sequence and parameter 4G Phase Sequence must be set to Positive Only.
- For loads which may vary between braking cycles, install a zero speed sensor to ensure that the soft starter ends DC braking when the motor stops. This avoids unnecessary heating of the motor.
- For more information on using the EM-GB with an external speed sensor (eg for applications with variable load during the braking cycle), refer to DC Brake with External Zero Speed Sensor.

7.5 Jog Operation

Jog runs the motor at reduced speed, to allow alignment of the load or to assist servicing. The motor can be jogged in either forward or reverse direction.

CAUTION:

- Slow speed running is not intended for continuous operation due to reduced motor cooling.
- Jog operation causes the motor to heat faster than the rate calculated by the motor thermal model. If you are using jog, install a motor thermistor or allow sufficient restart delay (parameter 4M).

NOTE:

- Soft start and soft stop are not available during jog operation.
- Jog is only available for the primary motor.
- The maximum available torque for jog forward is approximately 50%~75% of motor full load torque (FLT) depending on the motor. The torque when the motor is jogged in reverse is approximately 25% to 50% of FLT. Parameter 15E Jog Torque controls how much of the maximum available jog torque the soft starter will apply to the motor.
- Torque settings above 50% may cause increased shaft vibration.

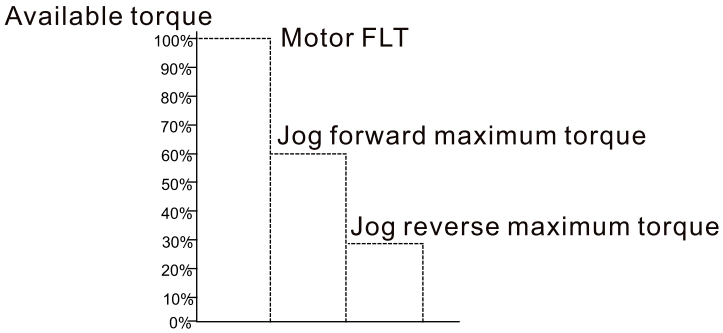

To activate jog operation, use either a programmable input (refer to parameters 6A and 6F, will operate only in Remote Mode) or a shortcut key (parameters 8B and 8C).

To stop a jog operation, perform one of the following:

- Remove the jog command.
- Press the STOP button on the keypad.

Jog will recommence at the end of a restart delay if the jog command is still present. All other commands except the above, will be ignored during jog operation.

7.6 Inside Delta Operation

Adaptive Control, Jog, Brake and PowerThrough functions are not supported with inside delta (six-wire) operation. If these functions are programmed when the starter is connected inside delta the behaviour is as given below:

Adaptive Control Start	The starter performs a constant current start.
Adaptive Control Stop	The starter performs a TVR soft stop if parameter 2I Stop Time is >0 secs. If parameter 2I is set to 0 secs the starter performs a coast to stop.
Jog	The starter issues a warning with the error message Unsupported Option.
Brake	The starter performs a coast to stop.
PowerThrough	The starter trips with the error message Lx-Tx Shorted.

NOTE:

- When connected in inside delta, current imbalance is the only phase loss protection that is active during run. Do not disable current imbalance protection (parameter 4H) during inside delta operation.
- When connecting in inside delta, enter the motor full load current (FLC) for parameter 1A. The EM-GB will automatically detect whether the motor is connected in-line or inside delta and will calculate the correct inside delta current leve.

8 . Programming Menu

You can access the Programming Menu at any time, including while the soft starter is running. Any changes to the start profile take effect immediately.

The Programming Menu contains four sub-menus:

Quick Setup	Quick Setup guides you through the parameters required to configure the EM-GB for common applications. Quick Setup suggests a value for each parameter, but you can change these as required.
Standard Menu	The Standard Menu provides access to commonly used parameters, allowing you to configure the EM-GB to suit your application.
Extended Menu	The starter issues a warning with the error message Unsupported Option.
Load/Save Settings	The starter performs a coast to stop.

8.1 Programming Menu

The Programming Menu lets you view and change programmable parameters that control how the EM-GB operates.

To open the Programming Menu, press the MENU button while viewing the monitoring screens.

To navigate through the Programming Menu:

- to scroll through parameter groups, press the "▲" or "▼" button.
- to open a submenu, press "►" the button.
- to view the parameters in a group, press the "►" button.
- to return to the previous level, press the "◄" button.
- to close the Programming Menu, press "◄" repeatedly.

To change a parameter value:

- scroll to the appropriate parameter in the Programming Menu and press "►" to enter edit mode.
- to alter the parameter setting, use the "▲" and "▼" buttons. Pressing "▲" or "▼" once will increase or decrease the value by one unit. If the button is held for longer than five seconds, the value will increase or decrease at a faster rate.
- to save changes, press STORE. The setting shown on the display will be saved and the keypad will return to the parameter list.
- to cancel changes, press EXIT. The keypad will ask for confirmation, then return to the parameter list without saving changes.

8.2 Adjustment Lock

You can lock the Programming Menu to prevent users from altering parameter settings. The adjustment lock can be turned on and off using parameter 15B.

To lock the programming menu:

1. Open the Programming Menu.
2. Open the Extended Menu.
3. Select 'Advanced'.
4. Enter the Access Code.
5. Select parameter 15B Adjustment Lock
6. Select and store 'Read Only'.

If a user attempts to change a parameter value when the adjustment lock is active, an error message is displayed:

Access Denied
Adj Lock is On

8.3 Access Code

Critical parameters (parameter group 15 and higher) are protected by a four-digit security access code, preventing unauthorized users from viewing or modifying parameter settings.

When a user attempts to enter a restricted parameter group, the keypad prompts for an access code. The access code is requested once for the programming session, and authorisation continues until the user closes the menu.

To enter the access code, use the "◄" and "►" buttons to select a digit, and the "▲" and "▼" buttons to change the value. When all four digits match your access code, press STORE. The keypad will display an acknowledgement message before continuing.

Enter Access Code
0###

Menu(Store)

Access Allowed
SUPERVISOR

To change the access code, use parameter 15A.

The simulation tools and counter resets are also protected by the security access code.

The default access code is 0000.

8.4 Quick Setup

The Quick Setup Menu makes it easy to configure the EM-GB for common applications. The EM-GB selects the parameters relevant to the application and suggests a typical setting, and you can adjust each parameter to suit your exact requirements.

Always set parameter 1A Motor Full Load Current to match the motor's nameplate full load current. The suggested value is the starter's minimum full load current.

On the display, the highlighted values are suggested values and the values indicated by a ➢ are the loaded values.

Application	Parameter	Suggested value
Pump Centrifugal	Motor Full Load Current	Model dependent
	Start Mode	Adaptive Control
	Adaptive Start Profile	Early Acceleration
	Start Ramp Time	10 seconds
	Stop Mode	Adaptive Control
	Adaptive Stop Profile	Late Deceleration
	Stop Time	15 seconds
Pump Submersible	Motor Full Load Current	Model dependent
	Start Mode	Adaptive Control
	Adaptive Start Profile	Early Acceleration
	Start Ramp Time	5 seconds
	Stop Mode	Adaptive Control
	Adaptive Stop Profile	Late Deceleration

Application	Parameter	Suggested value
	Stop Time	5 seconds
Fan Damped	Motor Full Load Current Start Mode Current Limit	Model dependent Constant Current 350%
Fan Undamped	Motor Full Load Current Start Mode Adaptive Start Profile Start Ramp Time Excess Start Time Locked Rotor Time	Model dependent Adaptive Control Constant Acceleration 20 seconds 30 seconds 20 seconds
Compressor Screw	Motor Full Load Current Start Mode Start Ramp Time Current Limit	Model dependent Constant Current 5 seconds 400%
Compressor Recip	Motor Full Load Current Start Mode Start Ramp Time Current Limit	Model dependent Constant Current 5 seconds 450%
Conveyor	Motor Full Load Current Start Mode Start Ramp Time Current Limit Stop Mode Adaptive Stop Profile Stop Time	Model dependent Constant Current 5 seconds 400% Adaptive Control Constant Deceleration 10 seconds
Crusher Rotary	Motor Full Load Current Start Mode Start Ramp Time Current Limit Excess Start Time Locked Rotor Time	Model dependent Constant Current 10 seconds 400% 30 seconds 20 seconds
Crusher Jaw	Motor Full Load Current Start Mode Start Ramp Time Current Limit Excess Start Time Locked Rotor Time	Model dependent Constant Current 10 seconds 450% 40 seconds 30 seconds

8.5 Standard Menu

The standard menu provides access to commonly used parameters, allowing the user to configure the EM-GB as required for the application. For details of individual parameters, refer to Parameter Descriptions in section 8.8.

Code	Parameter Group	Default Setting
1	**Motor Data-1**	
1A	Motor Full Load Current	Model dependent
2	**Start/Stop Modes-1**	
2A	Start Mode	Constant Current
2B	Start Ramp Time	10s
2C	Initial Current	350%
2D	Current Limit	350%
2H	Stop Mode	Coast To Stop
2I	Stop Time	0s
3	**Auto-Start/Stop**	
3A	Auto-Start Type	Off
3B	Auto-Start Time	1m
3C	Auto-Stop Type	Off
3D	Auto-Stop Time	1m
4	**Protection Settings**	
4A	Excess Start Time	20s
4C	Undercurrent	20%
4D	Undercurrent Delay	5s
4E	Instantaneous Overcurrent	400%
4F	Instantaneous Overcurrent Delay	0s
4G	Phase Sequence	Any Sequence
6	**Input**	
6A	Input A Function	Motor Set Select
6B	Input A Name	Input Trip
6C	Input A Trip	Always Active
6D	Input A Trip Delay	0s
6E	Input A Initial Delay	0s
6F	Input B Function	Input Trip (N/O)
6G	Input B Name	Input Trip
6H	Input B Trip	Always Active
6I	Input B Trip Delay	0s
6J	Input B Initial Delay	0s
7	**Output**	
7A	Relay A Function	Main Contactor
7B	Relay A On Delay	0s
7C	Relay A Off Delay	0s
7D	Relay B Function	Run
7E	Relay B On Delay	0s
7F	Relay B Off Delay	0s
7G	Relay C Function	Trip
7H	Relay C On Delay	0s
7I	Relay C Off Delay	0s

Code	Parameter Group	Default Setting
7M	Low Current Flag	50%
7N	High Current Flag	100%
7O	Motor Temperature Flag	80%
8	**Display**	
8A	Language	English
8B	F1 Button Action	Auto-Start/Stop Menu
8C	F2 Button Action	None
8D	Display A or kW	Current
8E	User Screen - Top Left	Starter State
8F	User Screen - Top Right	Blank
8G	User Screen - Bottom Left	Hours Run
8H	User Screen - Bottom Right	Analog Input

8.6 Extended Menu

The Extended Menu provides access to all the EM-GB's programmable parameters.

Code	Parameter Group	Default Setting
1	**Motor Data-1**	
1A	Motor Full Load Current	Model dependent
1B	Locked Rotor Time	0m:10s
1C	Locked Rotor Current	600%
1D	Motor Service Factor	105%
2	**Start/Stop Modes-1**	
2A	Start Mode	Constant Current
2B	Start Ramp Time	10s
2C	Initial Current	350%
2D	Current Limit	350%
2E	Adaptive Start Profile	Constant Acceleration
2F	Kickstart Time	0000ms
2G	Kickstart Level	500%
2H	Stop Mode	Coast To Stop
2I	Stop Time	0s
2J	Adaptive Stop Profile	Constant Deceleration
2K	Adaptive Control Gain	75%
2L	Brake Torque	20%
2M	Brake Time	0m:01s
3	**Auto-Start/Stop**	
3A	Auto-Start Type	Off
3B	Auto-Start Time	1m
3C	Auto-Stop Type	Off
3D	Auto-Stop Time	1m
4	**Protection Settings**	
4A	Excess Start Time	20s

Code	Parameter Group	Default Setting
4B	Excess Start Time-2	20s
4C	Undercurrent	20%
4D	Undercurrent Delay	5s
4E	Instantaneous Overcurrent	400%
4F	Instantaneous Overcurrent Delay	0s
4G	Phase Sequence	Any Sequence
4H	Current Imbalance	30%
4I	Current Imbalance Delay	0m:03s
4J	Frequency Check	Start/Run
4K	Frequency Variation	± 5Hz
4L	Frequency Delay	0m:01s
4M	Restart Delay	10s
4N	Motor Temperature Check	Do Not Check
4O	Ground Fault Level	100 mA
4P	Ground Fault Delay	0m:03s
4Q	Reserved	
4R	Reserved	
4S	Reserved	
4T	Reserved	
5	**Auto-Reset Trips**	
5A	Auto-Reset Action	Do Not Auto-Reset
5B	Maximum Resets	1
5C	Reset Delay Groups A&B	00m:05s
5D	Reset Delay Group C	05 m
6	**Input**	
6A	Input A Function	Motor Set Select
6B	Input A Name	Input Trip
6C	Input A Trip	Always Active
6D	Input A Trip Delay	0s
6E	Input A Initial Delay	0s
6F	Input B Function	Input Trip (N/O)
6G	Input B Name	Input Trip
6H	Input B Trip	Always Active
6I	Input B Trip Delay	0s
6J	Input B Initial Delay	0s
6K	Input C Function	Off
6L	Input D Function	Off
6M	Remote Reset Logic	Normally Closed
6N	Analog Input Trip	Do Not Trip
6O	Analog Input Scale	2-10 V
6P	Analog Trip Point	50%
6Q	Local/Remote	LCL/RMT Anytime

Code	Parameter Group	Default Setting
6R	Comms in Remote	Enable Control in RMT
7	**Output**	
7A	Relay A Function	Main Contactor
7B	Relay A On Delay	0s
7C	Relay A Off Delay	0s
7D	Relay B Function	Run
7E	Relay B On Delay	0s
7F	Relay B Off Delay	0s
7G	Relay C Function	Trip
7H	Relay C On Delay	0s
7I	Relay C Off Delay	0s
7J	Relay D Function	Off
7K	Relay E Function	Off
7L	Relay F Function	Off
7M	Low Current Flag	50%
7N	High Current Flag	100%
7O	Motor Temperature Flag	80%
7P	Analog Output A	Current (% FLC)
7Q	Analog A Scale	4-20 mA
7R	Analog A Maximum Adjustment	100%
7S	Analog A Minimum Adjustment	000%
7T	Adjustment 000%	Current (% FLC)
7U	Analog B Scale	4-20 mA
7V	Analog B Maximum Adjustment	100%
7W	Analog B Minimum Adjustment	000%
8	**Display**	
8A	Language	English
8B	F1 Button Action	Auto-Start/Stop Menu
8C	F2 Button Action	None
8D	Display A or kW	Current
8E	User Screen - Top Left	Starter State
8F	User Screen - Top Right	Blank
8G	User Screen - Bottom Left	Hours Run
8H	User Screen - Bottom Right	Analog Input
8I	Graph Data	Current (% FLC)
8J	Graph Timebase	10s
8K	Graph Maximum Adjustment	400%
8L	Graph Minimum Adjustment	000%
8M	Current Calibration	100%
8N	Mains Reference Voltage	400 V
8O	Voltage Calibration	100%
9	**Motor Data-2**	

Code	Parameter Group	Default Setting
9A	Dual Thermal Model	Single
9B	Motor FLC-2	Model dependent
9C	Locked Rotor Time-2	0m:10s
9D	Locked Rotor Current-2	600%
9E	Motor Service Factor-2	105%
10	**Start/Stop Modes-2**	
10A	Start Mode-2	Constant Current
10B	Start Ramp-2	0m:10s
10C	Initial Current-2	350%
10D	Current Limit-2	350%
10E	Adaptive Start Profile-2	Constant Acceleration
10F	Kickstart Time-2	0000 ms
10G	Kickstart Level-2	500%
10H	Stop Mode-2	Coast To Stop
10I	Stop Time-2	0m:00s
10J	Adaptive Stop Profile-2	Constant Deceleration
10K	Adaptive Control Gain-2	75%
10L	Brake Torque-2	20%
10M	Brake Time-2	0m:01s
11	**RTD Temperatures**	
11A	RTD/PT100 A °C	50 °C (122 °F)
11B	RTD/PT100 B °C	50 °C (122 °F)
11C	RTD/PT100 C °C	50 °C (122 °F)
11D	RTD/PT100 D °C	50 °C (122 °F)
11E	RTD/PT100 E °C	50 °C (122 °F)
11F	RTD/PT100 F °C	50 °C (122 °F)
11G	RTD/PT100 G °C	50 °C (122 °F)
12	**Slip-Ring Motors**	
12A	Motor Data-1 Ramp	Single Ramp
12B	Motor Data-2 Ramp	Single Ramp
12C	Changeover Time	150 ms
12D	Slip Ring Retard	50%
15	**Advanced (Requires Access Code. Default: 0000)**	
15A	Access Code	0000
15B	Adjustment Lock	Read & Write
15C	Emergency Run	Disable
15D	Shorted SCR Action	3-Phase Control Only
15E	Jog Torque	50%
16	**Protection Action**	
16A	Motor Overload	Trip Starter
16B	Excess Start Time	Trip Starter
16C	Undercurrent	Trip Starter

Code	Parameter Group	Default Setting
16D	Instantaneous Overcurrent	Trip Starter
16E	Current Imbalance	Trip Starter
16F	Frequency	Trip Starter
16G	Input A Trip	Trip Starter
16H	Input B Trip	Trip Starter
16I	Motor Thermistor	Trip Starter
16J	Starter Communication	Trip Starter
16K	Network Communication	Trip Starter
16L	Heatsink Overtemperature	Trip Starter
16M	Battery/Clock	Trip Starter
16N	Ground Fault	Trip Starter
16O	RTD/PT100 A	Trip Starter
16P	RTD/PT100 B	Trip Starter
16Q	RTD/PT100 C	Trip Starter
16R	RTD/PT100 D	Trip Starter
16S	RTD/PT100 E	Trip Starter
16T	RTD/PT100 F	Trip Starter
16U	RTD/PT100 G	Trip Starter
16V	Reserved	--
16W	Reserved	--
16X	Low Control Volts	Trip Starter
20	**Limited**	
	Only for factory setting	

8.7 Load/Save Settings

The Load/Save Settings menu requires an access code and allows users to:

- Load the EM-GB's parameters with default values
- Load parameter settings from an internal file
- Save the current parameter settings to an internal file

In addition to the factory default values file, the EM-GB can store two user-defined parameter files. These files contain default values until a user file is saved.

To load or save parameter settings:

1. Open the Programming Menu.
2. Scroll to Load/Save Settings and press the MENU button.
3. Scroll to the required function and press the MENU button.
4. At the confirmation prompt, select YES to confirm or NO to cancel and then STORE to load/save the selection.

When the action has been completed, the screen will briefly display a confirmation message, then return to the status screens.

Load/Save Settings
Load Defaults
Load Backup
Load User Set 1

Load Defaults
No
Yes

NOTE: The saved files and current operating settings are stored in both the keypad and in the soft starter. The keypad will prompt you to synchronise the settings whenever it is plugged into a new EM-GB.

8.8 Parameter Descriptions

1 Motor Data-1

The parameters in Motor Data-1 configure the soft starter to match the connected motor. These parameters describe the motor's operating characteristics and allow the soft starter to model the motor's temperature.

NOTE: When connecting in inside delta, enter the motor full load current (FLC) for parameter 1A. The EM-GB will automatically detect whether the motor is connected in-line or inside delta and will calculate the correct inside delta current level.

1A	Motor Full Load Current
	Range: Model dependent(Default) **Description:** Matches the starter to the connected motor's full load current. Set to the full load current (FLC) rating shown on the motor nameplate.
1B	Locked Rotor Time
	Range: 0:01-2:00 (minutes:seconds) (Default:10s) **Description:** Sets the maximum length of time the motor can sustain locked rotor current from cold before reaching its maximum temperature. Set according to the motor datasheet.
1C	Locked Rotor Current
	Range: 400% - 1200% FLC (Default:600%) **Description:** Sets the locked rotor current of the connected motor, as a percentage of full load current. Set according to the motor datasheet.
1D	Motor Service Factor
	Range: 100%-130% (Default:105%) **Description:** Sets the motor service factor used by the thermal model. If the motor runs at full load current, it will reach 100%. Set according to the motor datasheet.

NOTE: Parameters 1B, 1C and 1D determine the trip current for motor overload protection. The default settings of parameters 1B, 1C and 1D provide Motor Overload Protection: Class 10, Trip Current 105% of FLA (full load amperage) or equivalent.

2 Start/Stop Modes-1

2A	Start Mode
	Option: Constant Current (default) Adaptive Control

Description: Selects the soft start mode.

2B	Start Ramp Time

Range: 1 ~ 180 (seconds)（Default: 10s）

Description: Sets the total start time for an Adaptive Control start or the ramp time for current ramp starting (from the initial current to the current limit).

2C	Initial Current

Range: 100%-600% FLC（Default: 350%）

Description: Sets the initial start current level for current ramp starting, as a percentage of motor full load current. Set so that the motor begins to accelerate immediately after a start is initiated.

If current ramp starting is not required, set the initial current equal to the current limit.

2D	Current Limit

Range: 100%-600% FLC（Default: 350%）

Description: Sets the current limit for constant current and current ramp soft starting, as a percentage of motor full load current.

2E	Adaptive Start Profile

Option: Early Acceleration
Constant Acceleration (default)
Late Acceleration

Description: Selects which profile the EM-GB will use for an Adaptive Control soft start.

2F	Kickstart Time

Range: 0 – 2000 milliseconds (Default: 0000 milliseconds)

Description: Sets the kickstart duration. A setting of 0 disables kickstart.

2G	Kickstart Level

Range: 100%-700%FLC（Default: 500%）

Description: Sets the level of the kickstart current.

CAUTION: Kickstart subjects the mechanical equipment to increased torque levels. Ensure the motor, load and couplings can handle the additional torque before using this feature.

2H	Stop Mode

Option: Coast To Stop (default)
TVR Soft Stop
Adaptive Control
Brake

Description: Selects the stop mode

2I	Stop Time

Range: 0:00 - 4:00 (minutes:seconds) （Default: 0s）

Description: Sets the time for soft stopping the motor using timed voltage ramp or Adaptive Control. This also sets the total stopping time when using brake.

If a main contactor is installed, the contactor must remain closed until the end of the stop time. Use one of the programmable relays to control the main contactor.

2J	Adaptive Stop Profile

Option: Early Deceleration

Constant Deceleration (default)
Late Deceleration

Description: Selects which profile the EM-GB will use for an Adaptive Control soft stop.

2K	Adaptive Control Gain

Range: 1% - 200%（Default: 75%）

Description: Adjusts the performance of Adaptive Control. This setting affects both starting and stopping control.

NOTE: We recommend leaving the gain setting at the default level unless performance is not satisfactory.

If the motor accelerates or decelerates too quickly at the end of a start or stop, increase the gain setting by 5%~10%. If the motor speed fluctuates during starting or stopping, decrease the gain setting slightly.

2L	Brake Torque

Range: 20%-100%（Default: 20%）

Description: Sets the amount of brake torque the EM-GB will use to slow the motor.

2M	Brake Time

Range: 1-30 (seconds）（Default: 1s）

Description: Sets the duration for DC injection during a braking stop.

NOTE: Parameter 2M is used in conjunction with parameter 2I. Refer to Brake for details.

3 Auto-Start/Stop

The EM-GB can be programmed to start and stop automatically, after a specified delay or at a specified time of day. Auto-start and auto-stop can be set separately.

Auto-start/stop operation is only available in Remote mode. In Local mode, the starter will ignore any auto-start/stop setting.

CAUTION: The auto-start timer overrides any other form of control. The motor may start without warning.

WARNING:

- This function should not be used in conjunction with remote two-wire control.
- The soft starter will still accept start and stop commands from the remote inputs or serial communication network. To disable local or remote control, use parameter 6Q.
- If auto-start is enabled and the user is in the menu system, auto-start will become active if the menu times out (if no keypad activity is detected for five minutes).

3A	Auto-Start Type

Option: Off (default): The soft starter will not auto-start.
Timer: The soft starter will auto-start after a delay from the next stop, as specified in parameter 3B.

Clock: The soft starter will auto-start at the time programmed in parameter 3B.

Description: Selects whether the soft starter will auto-start after a specified delay, or at a time of day.

3B	Auto-Start Time

Range: 00:01 - 24:00 （hours:minutes）（Default: 1 minute）

Description: Sets the time for the soft starter to auto-start, in 24 hour clock format.

3C	Auto-Stop Type

Option: Off (default): The soft starter will not auto-stop.

Timer: The soft starter will auto-stop after a delay from the next start, as specified in parameter 3D.

Clock: The soft starter will auto-stop at the time programmed in parameter 3D.

Description: Selects whether the soft starter will auto-stop after a specified delay, or at a time of day.

3D	Auto-Stop Time

Range: 00:01 - 24:00 （hours:minutes）（Default: 1 minute）

Description: Sets the time for the soft starter to auto-stop, in 24 hour clock format.

4 Protection Settings

These parameters determine when the soft starter's protection mechanisms will activate. The activation point for each protection mechanism can be set to suit the installation.

The soft starter responds to protection events by tripping, warning, or writing the event to the event log. The response is determined by the Protection Action settings. The default response is a trip.

CAUTION: The protection settings are vital for safe operation of the soft starter and motor. Defeating the protection may compromise the installation and should only be done in the case of emergency.

4A-B	Excess Start Time

Excess start time is the maximum time the EM-GB will attempt to start the motor. If the motor does not transition to Run mode within the programmed limit, the starter will trip. Set for a period slightly longer than required for a normal healthy start. A setting of 0 disables excess start time protection.

Range: 0:00 - 4:00 (minutes:seconds) （Default: 20s）

Description: Parameter 4A sets the time for the primary motor and parameter 4B (Excess Start Time-2) sets the time for the secondary motor.

4C	Undercurrent

Range: 0%-100%（Default: 20%）

Description: Sets the trip point for undercurrent protection, as a percentage of motor full load current. Set to a level between the motor's normal working range and the motor's magnetising (no load) current (typically 25% to 35% of full load current). A setting of 0% disables undercurrent protection.

4D	Undercurrent Delay

Range: 0:00-4:00(minutes:seconds)（Default: 5s）

Description: Slows the EM-GB's response to undercurrent, avoiding trips due to momentary fluctuations.

4E	Instantaneous Overcurrent
	Range: 80%-600%FLC（Default: 400%）
	Description: Sets the trip point for instantaneous overcurrent protection, as a percentage of motor full load current.
4F	Instantaneous Overcurrent Delay
	Range: 0:00 - 1:00 (minutes:seconds)（Default: 0s）
	Description: Slows the EM-GB's response to overcurrent, avoiding trips due to momentary overcurrent events.
4G	Phase Sequence
	Option: Any Sequence (Default) Positive Only Negative Only
	Description: Selects which phase sequences the soft starter will allow at a start. During its pre-start checks, the starter examines the sequence of the phases at its input terminals and trips if the actual sequence does not match the selected option.
4H	Current Imbalance
	Range: 10%-50%（Default: 30%）
	Description: Sets the trip point for current imbalance protection.
4I	Current Imbalance Delay
	Range: 0:00 - 4:00 (minutes:seconds)（Default: 3s）
	Description: Slows the EM-GB's response to current imbalance, avoiding trips due to momentary fluctuations.
4J	Frequency Check
	Option: Do Not Check Start Only Start/Run (default) Run Only
	Description: Determines when and if the starter will monitor for a frequency trip.
4K	Frequency Variation
	Option: ± 2 Hz ± 5 Hz (default) ± 10 Hz ± 15 Hz
	Description: Selects the soft starter's tolerance for frequency variation.
4L	Frequency Delay
	Range: 0:01 - 4:00 (minutes:seconds)（Default: 1s）
	Description: Slows the EM-GB's response to frequency disturbances, avoiding trips due to momentary fluctuations.

NOTE: If the mains frequency drops below 35 Hz or rises above 75 Hz, the starter will trip immediately.

CAUTION: Running a motor outside its specified frequency for long periods can cause

damage and premature failure.

4M	Restart Delay

Range: 00:01-60:00 (minutes:seconds)（Default: 10s）

Description: The EM-GB can be configured to force a delay between the end of a stop and the beginning of the next start. During the restart delay period, the display shows the time remaining before another start can be attempted.

NOTE: The restart delay is measured from the end of each stop. Changes to the restart delay setting take effect after the next stop.

4N	Motor Temperature Check

Option: Do Not Check (default)
Check

Description: Selects whether the EM-GB will verify the motor has sufficient thermal capacity for a successful start. The soft starter compares the motor's calculated temperature with the temperature rise from the last motor start and only operates if the motor is cool enough to start successfully.

4O	Ground Fault Level

Range: 20mA - 50A（21steps）（Default: 100mA）

Description: Sets the trip point for ground fault protection.

4P	Ground Fault Delay

Range: 0:01 - 4:00 (minutes:seconds)（Default: 3s）

Description: Slows the EM-GB's response to ground fault variation, avoiding trips due to momentary fluctuations.

NOTE: Ground fault protection is only available if the RTD/PT100 and ground fault protection card is fitted.

4Q-T	Reserved

This parameter is reserved for internal use.

5 Auto-Reset Trips

The EM-GB can be programmed to automatically reset certain trips, which can help minimise operating downtime. Trips are divided into three categories for auto-reset, depending on the risk to the soft starter:

Group	Trips
A	Current imbalance Phase Loss Power loss Frequency
B	Undercurrent Instantaneous overcurrent Input A trip Input B trip
C	Motor overload

	RTD/PT100 temperature trips Motor thermistor Heatsink overtemperature

Other trips cannot be automatically reset.

This function is ideal for remote installations using 2-wire control in Remote mode. If the 2-wire start signal is present after an auto-reset, the EM-GB will restart.

5A Auto-Reset Action

Option: Do Not Auto-Reset (default)
Reset Group A
Reset Group A & B
Reset Group A, B & C

Description: Selects which trips can be auto-reset.

5B Maximum Resets

Range: 1 - 5（Default: 1）

Description: Sets how many times the soft starter will auto-reset, if it continues to trip. The reset counter increases by one each time the soft starter auto-resets, and decreases by one after each successful start/stop cycle.

5C Reset Delay Groups A&B

Range: 00:05 - 15:00(minutes:seconds)（Default: 5s）

Description: Sets the delay before resetting Group A and Group B trips.

5D Reset Delay Group C

Range: 5 - 60 (minutes)（Default: 5 minutes）

Description: Sets the delay before resetting Group C trips.

6 Input

The EM-GB has two programmable inputs, which allow remote control of the soft starter. If required, two extra inputs are available on the input/output expansion card.

6A Input A Function

Option:

Motor Set Select (Default): The EM-GB can be configured with two separate sets of motor data. To use the secondary motor data, parameter 6A must be set to 'Motor Set Select' and C53, C54 must be closed when a start command is given. The EM-GB checks which motor data to use at a start, and will use that motor data for the entire start/stop cycle.

Input Trip (N/O): Input A can be used to trip the soft starter. When parameter 6A is set to Input Trip (N/O), a closed circuit across C53, C54 trips the soft starter.

Input Trip (N/C): When parameter 6A is set to Input Trip (N/C), an open circuit across C53, C54 trips the soft starter.

Local/Remote Select: Input A can be used to select between local and remote control, instead of using the LCL/RMT button on the keypad. When the input is open, the starter is in local mode and can be controlled via the keypad. When the input is closed, the starter is in remote mode. The START and LCL/RMT buttons are disabled, and the soft starter will ignore any Local/Remote select command from the serial communications network. To use Input A to select between local and remote control, parameter 6Q must be set to 'LCL/RMT Anytime' or 'LCL/RMT When Off'.

Emergency Run: In emergency run the soft starter continues to run until stopped, ignoring all trips and warnings (refer to parameter 15C for details). Closing the circuit across C53, C54 activates emergency run. Opening the circuit ends emergency run and the EM-GB stops the motor.

Starter Disable: The EM-GB can be disabled via the control inputs. An open circuit across C53, C54 will disable the starter. The EM-GB will not respond to start commands. If running, the soft starter will allow the motor to coast to stop, ignoring the soft stop mode set in parameter 2H.

Jog Forward: Activates jog operation in a forward direction (will operate only in Remote mode).

Jog Reverse: Activates jog operation in reverse direction (will operate only in Remote mode).

Description: Selects the function of Input A.

6B	Input A Name

Option: Input Trip (Default): No Flow

Low Pressure: Starter Disable

High Pressure: Controller

Pump Fault: PLC

Low Level: Vibration

High Level

Description: Selects a message for the keypad to display when Input A is active.

6C	Input A Trip

Option:

Always Active (default): A trip can occur at any time when the soft starter is receiving power.

Operating Only: A trip can occur while the soft starter is running, stopping or starting.

Run Only: A trip can only occur while the soft starter is running.

Description: Selects when an input trip can occur.

6D	Input A Trip Delay

Range: 0:00 - 4:00 (minutes:seconds)（Default: 0s）

Description: Sets a delay between the input activating and the soft starter tripping.

6E	Input A Initial Delay

Range: 00:00 - 30:00 (minutes:seconds)（Default: 0s）

Description: Sets a delay before an input trip can occur. The initial delay is counted from the time a start signal is received. The state of the input is ignored until the initial delay has elapsed.

6F-J	Input B Trip

Parameters 6F~6J configure the operation of Input B, in the same way as parameters 6A~6E configure Input A. Refer to Input A for details.

- 6F Input B Function (Default: Input Trip (N/O))
- 6G Input B Name (Default: Input Trip)
- 6H Input B Trip (Default: Always Active)
- 6I Input B Trip Delay (Default: 0:00)
- 6J Input B Initial Delay (Default: 0:00)

6K-L	Inputs C and D

Parameters 6K and 6L select the function of Inputs C and D. Refer to parameter 6A for details.

Inputs C and D are only available if the input/output expansion card has been installed.

Option: Motor Set Select
Local/Remote Select
Emergency Run
Starter Disable (N/C)
Off (Default)

6M	Remote Reset Logic

Option: Normally Closed (Default)
Normally Open

Description: Selects whether the EM-GB's remote reset input (terminals C41, C42) is normally open or normally closed.

6N	Analog Input Trip

An analog input can be fitted to the EM-GB if required. An external device can activate the analog input to trip the soft starter in response to external conditions

Option: Do Not Trip (Default)
Trip High
Trip Low

Description: Selects the soft starter's response to the analog input signal.

6O	Analog Input Scale

Option:0-10V（Default）
2-10V

Description: Selects the scale of the analog input.

6P	Analog Trip Point

Range: 0% - 100%（Default: 50%）

Description: Sets the signal level at which an analog input trip will occur, as a percentage of the maximum signal on the input.

6Q	Local/Remote

Option: LCL/RMT Anytime: LCL/RMT button is always enabled.
LCL/RMT When Off: LCL/RMT button is enabled when the starter is off.
Local Control Only: All remote inputs are disabled.
Remote Control Only: Local control buttons (START, RESET, LCL/RMT) are disabled.

Description: Selects when the LCL/RMT button can be used to switch between local and remote control, and enables or disables the local control buttons and remote control inputs. The STOP button on the keypad is always enabled.

WARNING: The STOP button on the keypad is always enabled. When using two-wire remote control, the soft starter will restart if the remote start/stop and reset inputs are still active.

6R	Comms in Remote

Option: Disable Control in RMT
Enable Control in RMT (default)

Description: Selects whether the starter will accept Start and Stop commands from the serial communication network when in Remote mode. The Reset and Local/Remote Control commands are always enabled.

7 Output

The EM-GB has three programmable outputs, which can be used to signal different operating conditions to associated equipment. Three additional outputs are available on the input/output expansion card.

7A	Relay A Function

Option:

Off: Relay A is not used.

Main Contactor(Default): The relay closes when the EM-GB receives a start command, and remains closed as long as the motor is receiving voltage.

Run: The relay closes when the starter changes to run state.

Trip: The relay closes when the starter trips (refer to parameter 16A to 16X).

Warning: The relay closes when the starter issues a warning (refer to parameter 16A to 16X).

Low Current Flag: The relay closes when the low current flag activates while the motor is running (refer to parameter 7M Low Current Flag).

High Current Flag: The relay closes when the high current flag activates while the motor is running (refer to parameter 7N High Current Flag).

Motor Temperature Flag: The relay closes when the motor temperature flag activates (refer to parameter 7O Motor Temperature Flag).

Input A trip: The relay closes when Input A activates to trip the soft starter.

Input B trip: The relay closes when Input B activates to trip the soft starter.

Motor overload: The relay closes when the starter trips on Motor Overload.

Current imbalance: The relay closes when the starter trips on Current Imbalance.

Undercurrent: The relay closes when the starter trips on Undercurrent.

Instantaneous overcurrent: The relay closes when the starter trips on Instantaneous overcurrent.

Frequency: The relay closes when the starter trips on Frequency.

Ground fault: The relay closes when the starter trips on Ground Fault.

Heatsink overtemperature: The relay closes when the starter trips on Heatsink Overtemperature.

Phase Loss: The relay closes when the starter trips on Phase Loss.

Motor thermistor : The relay closes when the starter trips on Motor Thermistor.

Changeover Contactor: The relay closes when the high rotor resistance current ramp has reached full voltage, allowing use with a slip-ring motor.

Undervoltage: Not available with EM-GB.

Ready: The relay is closed when the starter is in Ready state.

Description: Selects the function of Relay A (normally open).

7B	Relay A On Delay

Range: 0:00 - 5:00(minutes:seconds)（Default: 0s）

Description: Sets the delay for closing Relay A.

7C	Relay A Off Delay

Range: 0:00 - 5:00 (minutes:seconds)（Default: 0s）

Description: Sets the delay for re-opening Relay A.

7D~L	Output Relays B, C, D, E, F

Parameters 7D~7L configure the operation of Relays B, C, D, E and F in the same way as

parameters 7A~7C configure Relay A. Refer to Relay A Function for details.

Relay B is a changeover relay.

- 7D Relay B Function (Default: Run)
- 7E Relay B On Delay
- 7F Relay B Off Delay

Relay C is a changeover relay.

- 7G Relay C Function (Default: Trip)
- 7H Relay C On Delay
- 7I Relay C Off Delay

Relays D, E and F are only available if the input/output expansion card has been installed. These relays do not support on or off delays and do not support 'Changeover Contactor' function.

Relay D is normally closed, relays E and F are normally open.

- 7J Relay D Function (Default: Off)
- 7K Relay E Function (Default: Off)
- 7L Relay F Function (Default: Off)

7M	Low Current Flag

The EM-GB has low and high current flags to give early warning of abnormal operation. The current flags can be configured to indicate an abnormal current level during operation, between the normal operating level and the undercurrent or instantaneousovercurrent trip levels. The flags can signal the situation to external equipment via one of the programmable outputs. The flags clear when the current returns within the normal operating range by 10% of the programmed flag value.

Range: 1% - 100%FLC（Default: 50%）

Description: Sets the level at which the low current flag operates, as a percentage of motor full load current.

7N	High Current Flag

Range: 50% - 600%FLC（Default: 100%）

Description: Sets the level at which the high current flag operates, as a percentage of motor full load current.

7O	Motor Temperature Flag

The EM-GB has a motor temperature flag to give early warning of abnormal operation. The flag can indicate that the motor is operating above its normal operating temperature but lower than the overload limit. The flag can signal the situation to external equipment via one of the programmable outputs.

Range: 0%-160%（Default: 80%）

Description: Sets the level at which the motor temperature flag operates, as a percentage of the motor's thermal capacity.

7P	Analog Output A

Option:

Current (% FLC) (Default): Current as a percentage of motor full load current.

Motor Temp (%): Motor temperature as a percentage of the motor's thermal capacity.

Motor kW (%): Measured motor kilowatts, as a percentage of maximum kW.

Motor kVA (%): Measured motor kilovolt amperes, as a percentage of maximum kVA.

Motor pf: Motor power factor, measured by the soft starter.

Description: Selects which information will be reported via the analog output.

Measured motor kW: √3 x average current x mains reference voltage x measured power factor
Maximum motor kW: √3 x motor FLC x mains reference voltage. Power factor is assumed to be 1
Measured motor kVA: √3 x average current x mains reference voltage
Maximum motor kVA: √3 x motor FLC x mains reference voltage

7Q	Analog A Scale

Option: 0-20 mA
4-20 mA (Default)

Description: Selects the range of the analog output.

7R	Analog A Maximum

Option:0-20 mA
4-20 mA （Default）

Description: alibrates the upper limit of the analog output to match the signal measured on an external current measuring device.

7S	Analog A Minimum

Range: 0% - 600%（Default: 0%）

Description: Calibrates the lower limit of the analog output to match the signal measured on an external current measuring device.

7T~W	Analog Output B

Parameters 7T~7W configure the operation of Analog Output B, in the same way as parameters 7P~7S configure analog output A.

Refer to Analog Output A for details.

Output B is only available if the input/output expansion card has been installed.

8 Display

These parameters allow the keypad to be tailored to individual users' requirements.

8A	Language

Option: English (Default)
Chinese
Español
Deutsch
Português
Français
Italiano
Russian

Description: Selects which language the keypad will use to display messages and feedback.

8B~C	F1 and F2 Button Action

Option: None
Auto-Start/Stop Menu
Jog Forward
Jog Reverse

Description: Selects the function of the F1 and F2 buttons on the keypad.

NOTE: The access code is not required to use the F1 and F2 buttons. Users can access

these functions regardless of the setting of parameter 15B Adjustment Lock.

8D	Display A or kW

Option: Current (default)
Motor kW

Description: Selects whether the EM-GB will display current (amperes) or motor kilowatts on the main monitoring screen.

8F~H	User-Programmable Screen

Option:

Blank: Displays no data in the selected area, allowing long messages to be shown without overlapping.

Starter State (default): The starter's operating state (starting, running, stopping or tripped). Only available for top left and bottom left positions on the screen.

Motor Current: The average current measured on three phases.

Motor pf: The motor's power factor, measured by the soft starter.

Mains Frequency: The average frequency measured on three phases.

Motor Kw: The motor's running power in kilowatts.

Motor HP: The motor's running power in horsepower.

Motor Temp: The motor's temperature, calculated by the thermal model.

kWh: The number of kilowatt hours the motor has run via the soft starter.

Hours Run: The number of hours the motor has run via the soft starter.

Analog Input: The level of analog input A (refer to parameters 6N~6P). This setting is only available if the input/output expansion option is installed.

Description: Selects which information will be displayed on the programmable monitoring screen.

- 8E User Screen - Top Left Default: Starter State
- 8F User Screen - Top Right Default: Blank
- 8G User Screen - Bottom Left Default: Hours Run
- 8H User Screen - Bottom Right Default: Analog Input

8I	Graph Data

The EM-GB has a real-time performance graph to report the behaviour of critical operating parameters.

Option: Current (% FLC) (default): Current as a percentage of motor full load current.
Motor Temp (%): Motor temperature as a percentage of the motor's thermal capacity.
Motor kW (%): Measured motor kilowatts, as a percentage of maximum kW.
Motor kVA (%): Measured motor kilovolt amperes, as a percentage of maximum kVA.
Motor pf: Motor power factor, measured by the soft starter.

Measured motor kW: √3 x average current x mains reference voltage x measured power factor
Maximum motor kW: √3 x motor FLC x mains reference voltage. Power factor is assumed to be 1
Measured motor kVA: √3 x average current x mains reference voltage
Maximum motor kVA: √3 x motor FLC x mains reference voltage

Description: Selects which information the graph will display

8J	Graph Timebase

Option: 10 seconds (default)
30 seconds

1 minute
5 minutes
10 minutes
30 minutes
1 hour

Description: Sets the graph time scale. The graph will progressively replace the old data with new data.

8K	Graph Maximum

Range: 0% – 600%（Default: 400%）

Description: Adjusts the upper limit of the performance graph.

8L	Graph Minimum

Range: 0% – 600%（Default: 0%）

Description: Adjusts the lower limit of the performance graph.

8M	Current Calibration

Range: 85% - 115%（Default: 100%）

Description: Calibrates the soft starter's current monitoring circuits to match an external current metering device.

Use the following formula to determine the necessary adjustment:

Calibration (%) = Current shown on EM-GB display/Current measured by external device

eg 102% = 66A/65A

NOTE: This adjustment affects all current-based functions and protections.

8N	Mains Reference Voltage

Range: 100 – 690 V（Default: 400V）

Description: Sets the nominal mains voltage for the keypad's monitoring functions. This is used to calculate motor kilowatts and kilovolt amperes (kVA) but does not affect the EM-GB's motor control or protection.

8O Reserved（This parameter is reserved for future use）

9 Motor Data-2

The EM-GB can support two different starting and stopping motor data sets.

- To use the EM-GB with two separate motors (such as a duty-standby configuration), use parameter 9A to select dual thermal modelling and configure parameters 9B~9E to suit the second motor.
- To use the EM-GB with two different motor data sets for the same motor (for dual speed motors or applications where starting conditions may vary), use parameter 9A to select a single thermal model, and configure the starting and stopping profiles as required in parameters 10A~10G. The soft starter will ignore parameters 9B~9E and will use settings from the primary motor.

To select the secondary motor data set, a programmable input must be configured to parameter set selection (parameters 6A and 6F) and the input must be active when the soft starter receives a start signal.

NOTE: You can only choose which motor data set to use while the soft starter is stopped.

9A	Dual Thermal Model
	Option: Single (default) Dual **Description:** Activates dual thermal modelling. The dual thermal model is required only if the EM-GB is controlling two physically separate motors.
9B	Motor FLC-2
	Range: Model dependent **Description:** Sets the secondary motor's full load current.
9C	Locked Rotor Time-2
	Range: 0:01-2:00 (minutes:seconds)（Default:10s） **Description:** Sets the maximum length of time the motor can sustain locked rotor current from cold before reaching its maximum temperature. Set according to the motor datasheet.
9D	Locked Rotor Current-2
	Range: 100% - 130%FLC（Default:105%） **Description:** Sets the locked rotor current of the connected motor, as a percentage of full load current. Set according to the motor datasheet.
9E	Motor Service Factor-2
	Range: 400% - 1200%FLC（Default:600%） **Description:** Sets the secondary motor's service factor.

10 Start/Stop-2

10A	Start Mode-2
	Option: Constant Current (default) Adaptive Control **Description:** Selects the soft start mode.
10B	Start Ramp Time-2
	Range: 1 - 180 (seconds) （Default:10s） **Description:** Sets the total start time for an Adaptive Control start or the ramp time for current ramp starting (from the initial current to the current limit).
10C	Initial Current-2
	Range: 100% - 600%（Default:350%） **Description:** Sets the initial start current level for current ramp starting, as a percentage of motor full load current. Set so that the motor begins to accelerate immediately after a start is initiated. If current ramp starting is not required, set the initial current equal to the current limit.
10D	Current Limit-2
	Range: 100%-600%FLC（Default:350%） **Description:** Sets the current limit for constant current and current ramp soft starting, as a percentage of motor full load current.
10E	Adaptive Start Profile-2
	Option: Early Acceleration Constant Acceleration (Default) Late Acceleration **Description:** Selects which profile the EM-GB will use for an Adaptive Control soft start.

10F	Kickstart Time-2
	Range: 0-2000 ((milliseconds))（Default:0000 (milliseconds)）
	Description: Sets the kickstart duration. A setting of 0 disables kickstart.
10G	Kickstart Level-2
	Range: 100% — 700%FLC（Default:500%）
	Description: Sets the level of the kickstart current.
10H	Stop Mode-2
	Option: Coast To Stop (default) TVR Soft Stop Adaptive Control Brake
	Description: Selects the stop mode
10I	Stop Time-2
	Range: 0:00 - 4:00 (minutes:seconds)（Default:0s）
	Description: Sets the stop time.
10J	Adaptive Stop Profile-2
	Option: Early Deceleration Constant Deceleration (default) Late Deceleration
	Description: Selects which profile the EM-GB will use for an Adaptive Control soft stop.
10K	Adaptive Control Gain-2
	Range: 1% - 200%（Default:75%）
	Description: Adjusts the performance of Adaptive Control. This setting affects both starting and stopping control.
10L	Brake Torque-2
	Range: 20%-100%（Default:20%）
	Description: Sets the amount of brake torque the EM-GB will use to slow the motor.
10M	Brake Time-2
	Range: 1-30 (seconds)（Default:1s）
	Description: Sets the duration for DC injection during a braking stop.

11 RTD Temperatures

The EM-GB has one RTD/PT100 input and can be fitted with another six PT100 inputs by using the RTD/PT100 and ground fault protection card. The inputs can trip the soft starter when the temperature exceeds a specified point, and different trip temperatures can be set for each input.

PT100 inputs B ~ G are only available if the RTD/PT100 and ground fault protection card has been installed.

Range: 0-250° C （Default:50° C）

Description: Sets the trip points for the RTD/PT100 inputs.

- 11A RTD A Trip Temp
- 11B RTD B Trip Temp
- 11C RTD C Trip Temp
- 11D RTD D Trip Temp
- 11E RTD E Trip Temp
- 11F RTD F Trip Temp
- 11G RTD G Trip Temp

12 Slip-Ring Motors

These parameters allow the soft starter to be configured for use with a slip-ring motor.

12A~B	Motor Data-1 and Motor Data-2 Ramp

Option: Single Ramp (default)
Dual Ramp

Description: Selects whether to use a single or dual current ramp profile for soft starting. Set to single ramp for non-slip ring induction motors, or dual ramp for slip-ring induction motors.

Parameter 12A selects the ramp configuration for the primary motor and parameter 12B selects the ramp configuration for the secondary motor.

12C	Changeover Time

Range: 100-500 (milliseconds)（Default:150ms）

Description: Sets the delay between the rotor resistance relay closing and the low resistance current ramp starting. Set so that the contactor has enough time to close, but the motor does not slow down.

Parameter 12C only applies if parameter 12A or 12B is set to 'Dual Ramp', and an output relay is set to 'Changeover Contactor'.

12D	Slip-Ring Retard

Range: 10%-90%（Default:50%）

Description: Sets the level of conduction after the rotor resistance contactor closes, as a percentage of full conduction. Set so that no current pulse occurs, but the motor retains enough speed to start correctly.

15 Advanced

15A	Access Code

Range: 0000 - 9999（Default:0000）

Description: Sets the access code to control access to restricted sections of the menus.

Use the "◄" EXIT and "►" MENU buttons to select which digit to alter and use the "▲" and "▼" buttons to change the value.

NOTE: In the event of a lost access code, contact your supplier for a master access code that allows you to re-program a new access code

15B	Adjustment Lock

Option:

Read & Write (Default): Allows users to alter parameter values in the Programming Menu.

Read Only: Prevents users altering parameter values in the Programming Menu. Parameter values can still be viewed.

Description: Selects whether the keypad will allow parameters to be changed via the Programming Menu.

NOTE: Changes to the Adjustment Lock setting take effect only after the Programming Menu has been closed.

15C	Emergency Run

Option: Disable (default)
Enable

Description: Selects whether the soft starter will permit emergency run operation. In emergency run, the soft starter will start (if not already running) and continue to operate until emergency run ends, ignoring stop commands and trips. Emergency run is controlled using a programmable input.

CAUTION: Continued use of Emergency Run is not recommended. Emergency Run may compromise the starter life as all protections and trips are disabled.
Using the starter in 'Emergency Run' mode will void the product warranty.

15D	Shorted SCR Action

Option: 3-Phase Control Only (Default)
PowerThrough

Description: Selects whether the soft starter will allow PowerThrough operation, if the soft starter is damaged on one phase. The soft starter will use two-phase control, allowing the motor to continue operating in critical applications.

- PowerThrough is only available with in-line installations. If the starter is installed inside delta, PowerThrough will not operate.
- PowerThrough remains active until '3-Phase Control Only' is reselected.
- A shorted SCR or a short within the bypass contactor will trip the starter on ‘Lx-Tx shorted’. If PowerThrough is enabled, the trip can be reset and subsequent starts will use PowerThrough two-phase control; however not all features will be available. The trip LED will flash and the display will indicate ‘2 Phase - Damaged SCR'.

CAUTION:

- PowerThrough uses a two-phase soft start technology and additional care is required when sizing circuit breakers and protection. Contact your local supplier for assistance.
- The starter will trip on Lx-Tx Shorted on the first start attempt after control power is applied. PowerThrough will not operate if control power is cycled between starts.
- PowerThrough operation does not support Adaptive Control soft starting or soft stopping. In PowerThrough, the EM-GB will automatically select constant current soft starting and timed voltage ramp soft stopping. If PowerThrough is enabled, parameters 2C and 2D must be set appropriately.

15E	Jog Torque

The EM-GB can jog the motor at a reduced speed, which allows precise positioning of belts and flywheels. Jog can be used for either forward or reverse operation

Range: 20%-100%（Default:50%）

Description: Sets the current limit for jog operation.

16 Protection Action

These parameters define how the soft starter will respond to different protection events. The soft starter can trip, issue a warning, or ignore different protection events as required. All protection events are written to the event log. The default action for all protections is to trip the soft starter.

Protections 16N Ground Fault and 16P~16U RTD/PT100 are only available if the RTD/PT100 and ground fault protection card has been fitted.

CAUTION: Defeating the protection may compromise the starter and motor, and should only be done in the case of emergency.

16A~X	Protection Actions
	Option: Trip Starter (Default) Warn and Log Log Only
	Description: Selects the soft starter's response to each protection.

16A Motor Overload	16J Starter Communication
16B Excess Start Time	16K Network Communication
16C Undercurrent	16L Heatsink Overtemperature
16D Instantaneous Overcurrent	16M Battery/Clock
16E Current Imbalance	16N Ground Fault
16F Frequency	16O~16U RTD A~G Overtemperature
16G Input A Trip	16V Reserved
16H Input B Trip	16W Reserved
16I Motor Thermistor	16X Low Control Volts

9. Troubleshooting

9.1 Protection Responses

When a protection condition is detected, the EM-GB will write this to the event log and may also trip or issue a warning. The soft starter's response depends on the Protection Action setting (parameter group 16).

Some protection responses cannot be adjusted by the user. These trips are usually caused by external events (such as phase loss) or by a fault within the soft starter. These trips do not have associated parameters and cannot be set to Warn or Log.

If the EM-GB trips you will need to identify and clear the condition that triggered the trip, then reset the soft starter before restarting. To reset the starter, press the RESET button on the keypad or activate the Reset remote input.

If the EM-GB has issued a warning, the soft starter will reset itself once the cause of the warning has been resolved.

9.2 Trip Messages

This table lists soft starter's protection mechanisms and the probable cause of the trip. Some of these can be adjusted using parameter group 4 Protection Settings and parameter group 16 Protection Action, other settings are built-in system protections and cannot be set or adjusted.

Display	Possible cause & Solution
Battery/clock	A verification error has occurred on the real time clock, or the backup battery voltage is low. If the battery is low and the power is off, date/time settings will be lost. The EM-GB will continue to soft start and soft stop correctly. Reprogram the date and time. The battery is not removable. In order to replace the battery, the main control PCB must be replaced. Related parameters: 16M
Controller	This is a name selected for a programmable input. Refer to Input A trip.
Current imbalance	Current imbalance can be caused by problems with the motor, the environment or the installation, such as: ● An imbalance in the incoming mains voltage ● A problem with the motor windings ● A light load on the motor ● A phase loss on input terminals L1, L2 or L3 during Run mode ● An SCR that has failed open circuit. A failed SCR can only be definitely diagnosed by replacing the SCR and checking the starter's performance. Related parameters: 4H, 4I, 16E
Current Read Err Lx	Where 'X' is 1, 2 or 3. Internal fault (PCB fault). The output from the CT circuit is not close enough to zero when the SCRs are turned off. Contact your local supplier for advice. This trip is not adjustable. Related parameters: None
Excess start time	Excess start time trip can occur in the following conditions: ● parameter 1A Motor Full Load Current is not appropriate for the motor ● parameter 2D Current Limit has been set too low

Display	Possible cause & Solution
	● parameter 2B Start Ramp Time has been set greater than the setting for 4A Excess Start Time setting ● parameter 2B Start Ramp Time is set too short for a high inertia load when using Adaptive Control Related parameters: 1A, 9B, 2D, 2B, 4A, 10D, 10B, 4B, 16B
Firing Fail Px	Where 'X' is phase 1, 2 or 3. The SCR did not fire as expected. The SCR may be faulty or there may be an internal wiring fault. This trip is not adjustable. Related parameters: None
FLC too high	The EM-GB can support higher motor full load current values when connected to the motor using inside delta configuration rather than in-line connection. If the soft starter is connected in-line but the programmed setting for parameter 1A Motor Full Load Current is above the in-line maximum, the soft starter will trip at start. If the soft starter is connected to the motor using inside delta configuration, the soft starter may not be correctly detecting the connection. Contact your local supplier for advice. Related parameters: 1A, 9B
Frequency	The mains frequency has gone beyond the specified range. Check for other equipment in the area that could be affecting the mains supply, particularly variable speed drives and switch mode power supplies (SMPS). If the EM-GB is connected to a generator set supply, the generator may be too small or could have a speed regulation problem. Related parameters: 4J, 4K, 4L, 16F
Ground Fault	Test the insulation of the output cables and the motor. Identify and resolve the cause of any ground fault. **NOTE**: Ground fault protection is only available if the RTD/PT100 and ground fault protection card is fitted. Related parameters: 4O, 4P, 16N
Heatsink overtemperature	Check if cooling fans are operating. If mounted in an enclosure, check if ventilation is adequate. Fans operate during Start, Run and for 10 minutes after the starter exits the Stop state.Models with fans will operate the cooling fans from a Start until 10 minutes after a Stop. Related parameters: 16L
High Level	This is a name selected for a programmable input. Refer to Input A trip.
High Pressure	This is a name selected for a programmable input. Refer to Input A trip.
Input A trip	One of the soft starter's inputs is set to a trip function and has activated. Check the status of the inputs to identify which input has activated, then resolve the trigger condition. Related parameters: 6C, 6D, 6E, 6A, 6B, 16G
Instantaneous overcurrent	There has been a sharp rise in motor current, probably caused by a locked rotor condition (shearpin) while running. This may indicate a jammed load.

Display	Possible cause & Solution
	Related parameters: 4E, 4F, 16D
Internal fault X	The EM-GB has tripped on an internal fault. Contact your local supplier with the fault code (X). Related parameters: None
L1 phase loss **L2 phase loss** **L3 phase loss**	During pre-start checks the starter has detected a phase loss as indicated. In run state, the starter has detected that the current on the affected phase has dropped below 2% of the programmed motor FLC for more than 1 second, indicating that either the incoming phase or connection to the motor has been lost. Check the supply and the input and output connections at the starter and at the motor end. Related parameters: None
L1-T1 shorted **L2-T2 shorted** **L3-T3 shorted**	During pre-start checks the starter has detected a shorted SCR or a short within the bypass contactor as indicated. If the starter is connected in-line with the motor, consider using PowerThrough to allow operation until the starter can be repaired. **NOTE:** ● PowerThrough is only available with in-line installations. If the starter is installed inside delta, PowerThrough will not operate. ● The starter will trip on Lx-Tx Shorted on the first start attempt after control power is applied. PowerThrough will not operate if control power is cycled between starts. Related parameters: 15D
Low Control Volts	The EM-GB has detected a drop in the internal control voltage. ● Check the external control supply (A1, A2, A3) and reset the starter. If the external control supply is stable: ● the 24 V supply on the main control PCB may be faulty; or ● the bypass driver PCB may be faulty (internally bypassed models only). Contact your local supplier for advice. This protection is not active in Ready state. Related parameters: 16X
Low Level	This is a name selected for a programmable input. Refer to Input A trip.
Low Pressure	This is a name selected for a programmable input. Refer to Input A trip.
Motor overload	The motor has reached its maximum thermal capacity. Overload can be caused by: ● The soft starter protection settings not matching the motor thermal capacity ● Excessive starts per hour or start duration ● Excessive current ● Damage to the motor windings Related parameters: 1A, 1B, 1C, 1D, 16A
Motor 2 overload	Refer to Motor overloard **Note:** Only applicable after the second set of motors has been programmed. Related parameters:: 9A, 9B, 9C, 9D, 9E, 16A
Motor	Where 'X' is 1, 2 or 3.

Display	Possible cause & Solution
Connection Tx	The motor is not connected correctly to the soft starter. ● Check individual motor connections to the soft starter for power circuit continuity. ● Check connections at the motor terminal box. This trip is not adjustable. Related parameters: None
Motor thermistor	The motor thermistor input has been enabled and: ● The resistance at the thermistor input has exceeded 3.6 kΩ for more than one second. ● The motor winding has overheated. Identify the cause of the overheating and allow the motor to cool before restarting. ● The motor thermistor input has been opened. NOTE: If a valid motor thermistor is no longer used, a 1.2 kΩ resistor must be fitted across terminals B4, B5. Related parameters: 16I
Network communication (between device and network)	There is a network communication problem, or the network master may have sent a trip command to the starter. Check the network for causes of communication inactivity. Related parameters: 16K
No Flow	This is a name selected for a programmable input. Refer to Input A trip.
Parameter out of range	A parameter value is outside the valid range. The starter will load the default value for all affected parameters. Press RESET to go to the first invalid parameter and adjust the setting. Related parameters: None
Phase sequence	The phase sequence on the soft starter's input terminals (L1, L2, L3) is not valid. Check the phase sequence on L1, L2, L3 and ensure the setting in parameter 4G is suitable for the installation. Related parameters: 4G
PLC	This is a name selected for a programmable input. Refer to Input A trip..
Power loss	The starter is not receiving mains supply on one or more phases when a Start Command is given. Check that the main contactor closes when a start command is given, and remains closed until the end of a soft stop. Check the fuses. If testing the soft starter with a small motor, it must draw at least 2% of its minimum FLC setting on each phase. Related parameters: None
Pump Fault	This is a name selected for a programmable input. Refer to Input A trip.
RTD/PT100 A~ RTD/PT100 G	The RTD/PT100 set temperature has been exceeded and tripped the soft starter. Identify and resolve the condition which caused the appropriate input to activate. **NOTE:** PT100 B to PT100 G are applicable only if a RTD/PT100 and Ground Fault card is fitted. Related parameters: 11A~11G, 16O~16U
RTD circuit fail	Indicates that the indicated RTD/PT100 has short circuited. Check and resolve

Display	Possible cause & Solution
	this condition. Related parameters: None
Starter communication (between device and soft starter)	There is a problem with the connection between the soft starter and the optional communications module. Remove and reinstall the module. If the problem persists, contact your local distributor. There is an internal communications error within the soft starter. Contact your local distributor. Related parameters: 16J
Starter Disable	This is a name selected for a programmable input. Refer to Input A trip.
Thermistor circuit	Check that a PT100 (RTD) is not connected to B4, B5. The thermistor input has been enabled and: The resistance at the input has fallen below 20Ω (the cold resistance of most thermistors will be over this value) or A short circuit has occurred. Check and resolve this condition. Related parameters: None
Time-overcurrent	The EM-GB is internally bypassed and has drawn high current during running. (The 10A protection curve trip has been reached or the motor current has risen to 600% of the motor FLC setting.) Related parameters: None
Undercurrent	The motor has experienced a sharp drop in current, caused by loss of load. Causes can include broken components (shafts, belts or couplings), or a pump running dry. Related parameters: 4C, 4D, 16C
Unsupported option (function not available in inside delta)	The selected function is not available (eg jog is not supported in inside delta configuration). Related parameters: None
Vibration	This is a name selected for a programmable input. Refer to Input A trip.
VZC Fail Px	Where 'X' is 1, 2 or 3. Internal fault (PCB fault). Contact your local supplier for advice. This trip is not adjustable. Related parameters: None

9.3 General Faults

This table describes situations where the soft starter does not operate as expected but does not trip or give a warning.

Starter "Not Ready"

- Check Input A (C53, C54). The starter may be disabled via a programmable input. If parameter 6A or 6F is set to Starter Disable and there is an open circuit on the corresponding input, the EM-GB will not start.

The soft starter does not respond to the START or RESET button on the keypad.

- The soft starter may be in Remote control mode. When the soft starter is in Remote control mode, the Local LED on the starter is off. Press the LCL/RMT button once to change to Local control.

The soft starter does not respond to commands from the control inputs.

- The soft starter may be in Local control mode. When the soft starter is in Local control mode, the Local LED on the starter is on. Press the LCL/RMT button once to change to Remote control.
- The control wiring may be incorrect. Check that the remote start, stop and reset inputs are configured correctly (refer to Control Wiring on page 10 for details).
- The signals to the remote inputs may be incorrect. Test the signalling by activating each input signal in turn. The appropriate remote control input LED should activate on the starter.

The soft starter does not respond to a start command from either the local or remote controls.

- The soft starter may be waiting for the restart delay to elapse. The length of the restart delay is controlled by parameter 4M Restart Delay.
- The motor may be too hot to permit a start. If parameter 4N Motor Temperature Check is set to Check, the soft starter will only permit a start when it calculates that the motor has sufficient thermal capacity to complete the start successfully. Wait for the motor to cool before attempting another start.
- The starter may be disabled via a programmable input. If parameter 6A or 6F is set to Starter Disable and there is an open circuit on the corresponding input, the EM-GB will not start. If there is no further need to disable the starter, close the circuit on the input.

NOTE: Parameter 6Q Local/Remote controls when the LCL/RMT button is enabled.

A reset does not occur after an Auto-Reset, when using a remote two-wire control.

- The remote 2-wire start signal must be removed and reapplied for a re-start.

Remote start/stop command is overriding Auto Start/Stop settings when using remote two-wire control.

- Auto Start/Stop should only be used in remote mode with three-wire or four-wire control.

Non-resettable Thermistor Cct trip, when there is a link between the thermistor input B4, B5 or when the motor thermistor connected between B4, B5 is permanently removed.

- The thermistor input is enabled once a link is fitted and short circuit protection has activated.
  - Remove the link then load the default parameter set. This will disable the thermistor input and clear the trip.
  - Place a 1k2 Ω resistor across the thermistor input.
  - Turn thermistor protection to 'Log only' (parameter 16I).

Remote start/stop command is overriding Auto Start/Stop settings when using remote two-wire control.

- **Auto Start/Stop should only be used in remote mode with three-wire or four-wire control.**

The soft starter does not control the motor correctly during starting.

- Start performance may be unstable when using a low Motor Full Load Current setting (parameter 1A).
- Power factor correction (PFC) capacitors must be installed on the supply side of the soft starter and must be disconnected during starting and stopping. To control a dedicated PFC capacitor contactor, connect the contactor to run relay terminals.

Motor does not reach full speed.

- If the start current is too low, the motor will not produce enough torque to accelerate to full speed. The soft starter may trip on excess start time.

NOTE: Make sure the motor starting parameters are appropriate for the application and that you are using the intended motor starting profile. If a programmable input is set to Motor Set Select, check that the corresponding input is in the expected state.

The load may be jammed. Check the load for severe overloading or a locked rotor situation.

Erratic motor operation.

- The SCRs in the EM-GB require at least 5 A of current to latch. If you are testing the soft starter on a motor with full load current less than 5 A, the SCRs may not latch correctly.

Erratic and noisy motor operation.

- If the soft starter is connected to the motor using inside delta configuration, the soft starter may not be correctly detecting the connection. Contact your local supplier for advice.

Soft stop ends too quickly.

- The soft stop settings may not be appropriate for the motor and load. Review the soft stop settings.
- If the motor is very lightly loaded, soft stop will have limited effect.

Adaptive Control, brake, jog and PowerThrough functions not working.

- These features are only available with in-line installation. If the EM-GB is installed inside delta, these features will not operate.

After selecting Adaptive Control the motor used an ordinary start and/or the second start was different to the first.

- The first Adaptive Control start is actually 'Constant Current' so that the starter can learn from the motor characteristics. Subsequent starts use Adaptive Control.

PowerThrough does not operate when selected.

- The starter will trip on Lx-Tx Shorted on the first start attempt after control power is applied. PowerThrough will not operate if control power is cycled between starts.

Starter "awaiting data"

- The keypad is not receiving data from the control PCB. Check the cable connection and the fitting of the display on the starter.

Parameter settings cannot be stored.

- The keypad may not be screwed down, resulting in an intermittent connection. Screw down the keypad or hold squarely in place.

Display is distorted

- Check that the keypad has not been screwed down too tightly. Loosen screws slightly.

Parameter settings cannot be stored.

- Make sure you are saving the new value by pressing the STORE button after adjusting a parameter setting. If you press EXIT, the change will not be saved.
- Check that the adjustment lock (parameter 15B) is set to Read & Write. If the adjustment lock is set to Read Only, settings can be viewed but not changed. You need to know the security access code to change the adjustment lock setting.
- The EEPROM may be faulty on the keypad. A faulty EEPROM will also trip the soft starter, and the keypad will display the message Parameter out of range. Contact your local supplier for advice.

ATTENTION! Remove Mains Volts

- The soft starter will not activate Run Simulation with three-phase power connected. This prevents unintentional direct on-line (DOL) start.

Appendix

The following series of application notes will give you an idea of the advanced installation and configuration of the soft starter under certain performance requirements. Application notes explain various application conditions, including brake operation, jog operation, pumping options, and advanced protection options.

I Installation with Main Contactor

The EM-GB is installed with a main contactor (AC3 rated). Control voltage must be supplied from the input side of the contactor.

The main contactor is controlled by the EM-GB Main Contactor output, which by default is assigned to Output Relay A (terminals 13, 14).

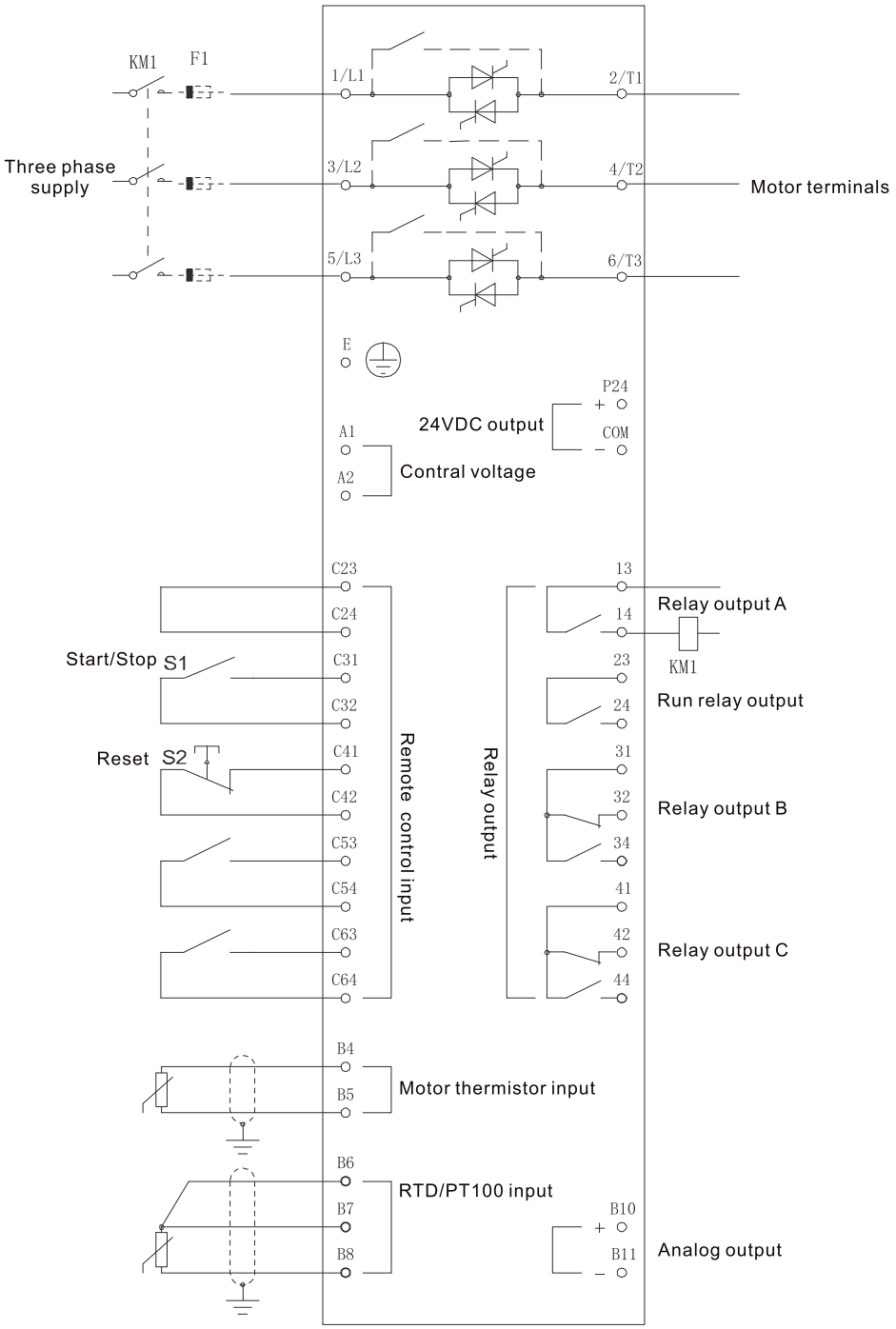

II Emergency Run Operation

In normal operation the EM-GB is controlled via a remote two-wire signal (terminals C31, C32).

Emergency Run is controlled by a two-wire circuit connected to Input A (terminals C53, C54). Closing Input A causes the EM-GB to run the motor and ignore certain trip conditions.

NOTE: Although the Emergency Run satisfies the functionality requirements of Fire Mode, AuCom does not recommend its use in situations that require testing and/or compliance with specific standards as it is not certified.

CAUTION: Continued use of Emergency Run is not recommended. Emergency Run may compromise the starter life as all protections and trips are disabled.

Using the starter in 'Emergency Run' mode will void the product warranty.

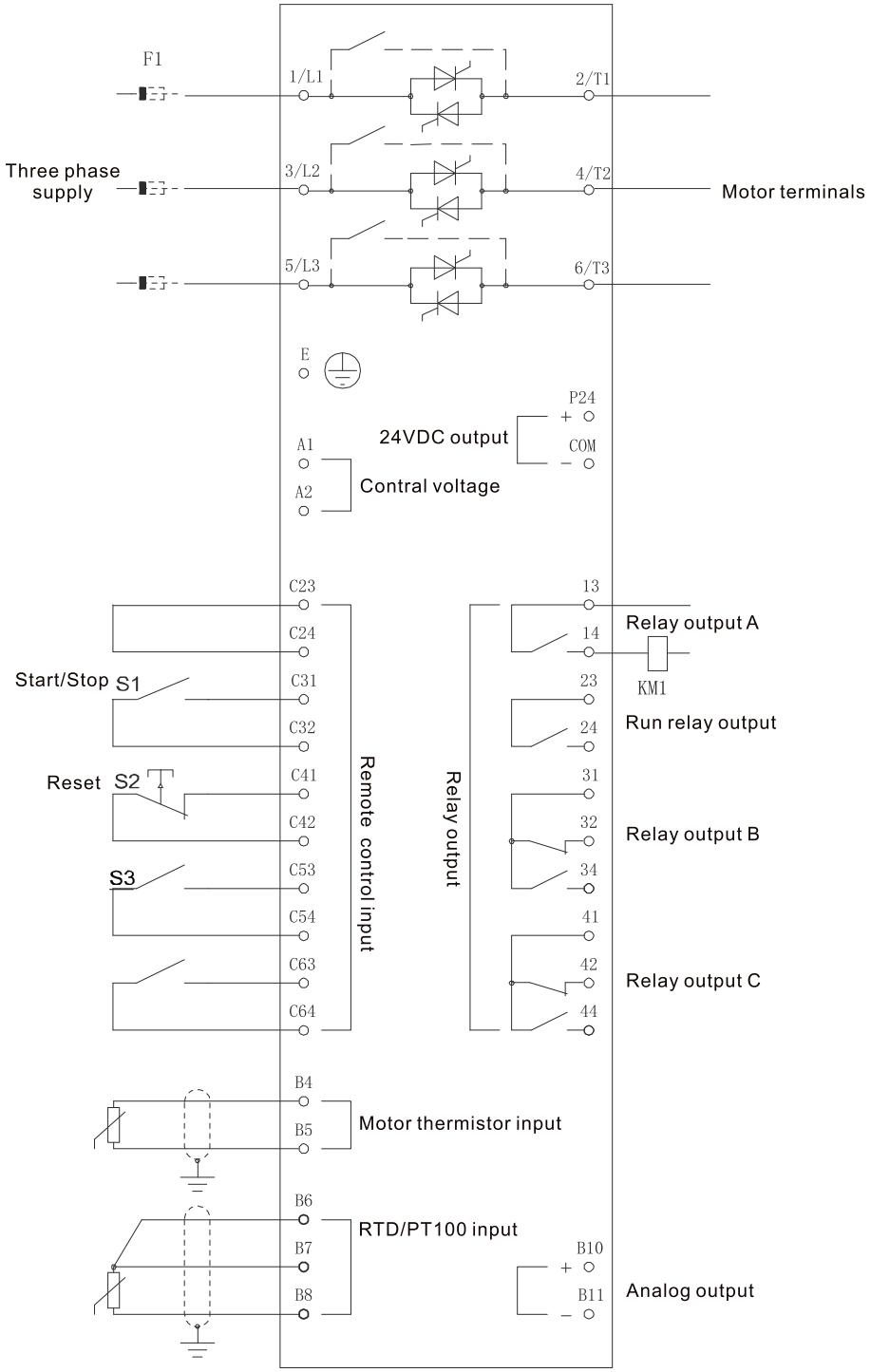

Parameter settings:

Parameter 6A Input A Function

- Select 'Emergency Run' - assigns Input A for Emergency Run function.

Parameter 15C Emergency Run

- **S**elect 'Enable' - Enables Emergency Run mode.

III Auxiliary Trip Circuit

In normal operation the EM-GB is controlled via a remote two-wire signal (terminals C31, C32).

Input A (terminals C53, C54) is connected to an external trip circuit (such as a low pressure alarm switch for a pumping system). When the external circuit activates, the soft starter trips, which stops the motor.

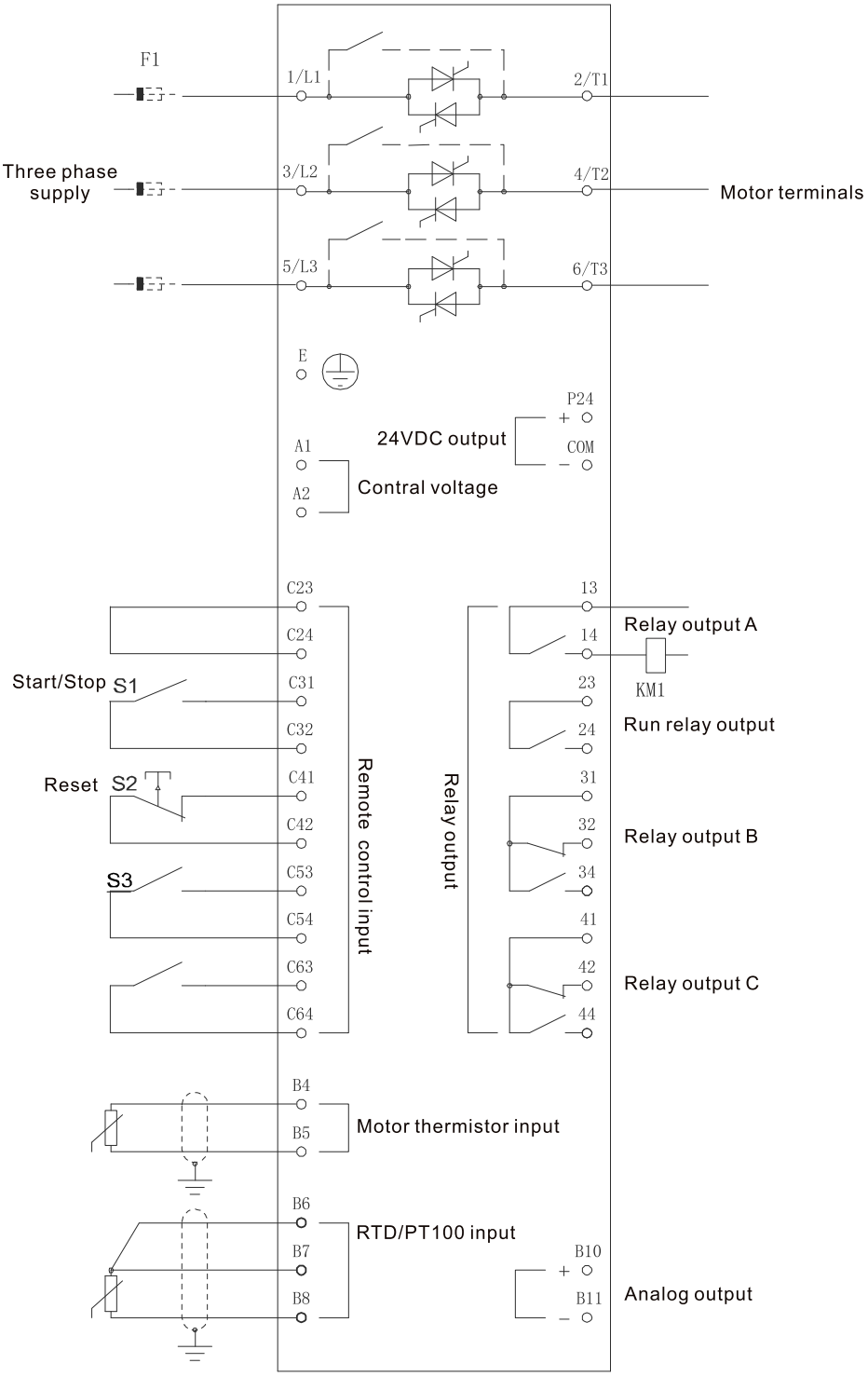

Parameter settings:

Parameter 6A Input A Function

- Select 'Input Trip (N/O)'. Assigns the Input A to Auxiliary Trip (N/O) function.

Parameter 6B Input A Name

- Select a name, eg Low Pressure. Assigns a name to Input A.

Parameter 6C Input A Trip

- Set as required. For example, 'Run Only' limits the input trip to when the soft starter is running only.

Parameter 6D Input A Trip Delay

- Set as required. Sets a delay between the input activating and the soft starter tripping.

Parameter 6E Input A Initial Delay

- Set at around 120 seconds. Limits operation of the input trip to 120 seconds after the start signal. This allows time for pressure to build up in the piping before the low pressure input becomes active.

IV DC Brake with External Zero Speed Sensor

For loads which may vary between braking cycles, there are benefits in using an external zero-speed sensor to interface with the EM-GB for brake shut-off. This control method ensures that the EM-GB braking will always shut off when the motor has reached a standstill, thus avoiding unnecessary motor heating.

The following schematic diagram shows how you can use a zero-speed sensor with the EM-GB to turn the brake function off at motor standstill. The zero-speed sensor (A2) is often referred to as an under-speed detector. Its internal contact is open at zero-speed and closed at any speed above zero-speed. Once the motor has reached a standstill, C53, C54 will open and the starter will be disabled. When the next start command is given (ie next application of K10), C53, C54 closes and the EM-GB is enabled.

The EM-GB must be operated in remote mode and parameter 6A Input A Function must be set to 'Starter Disable'.

CAUTION:

- Brake operation causes the motor to heat faster than the rate calculated by the motor thermal model. If you are using brake, install a motor thermistor or allow sufficient restart delay (parameter 4M).
- When using DC brake, the mains supply must be connected to the soft starter (input terminals L1, L2, L3) in positive phase sequence and parameter 4G Phase Sequence must be set to Positive Only.
- If the brake torque is set too high, the motor will stop before the end of the brake time and the motor will suffer unnecessary heating which could result in damage. Careful configuration is required to ensure safe operation of the starter and motor.
- A high brake torque setting can result in peak currents up to motor DOL being drawn while the motor is stopping. Ensure protection fuses installed in the motor branch circuit are selected appropriately.

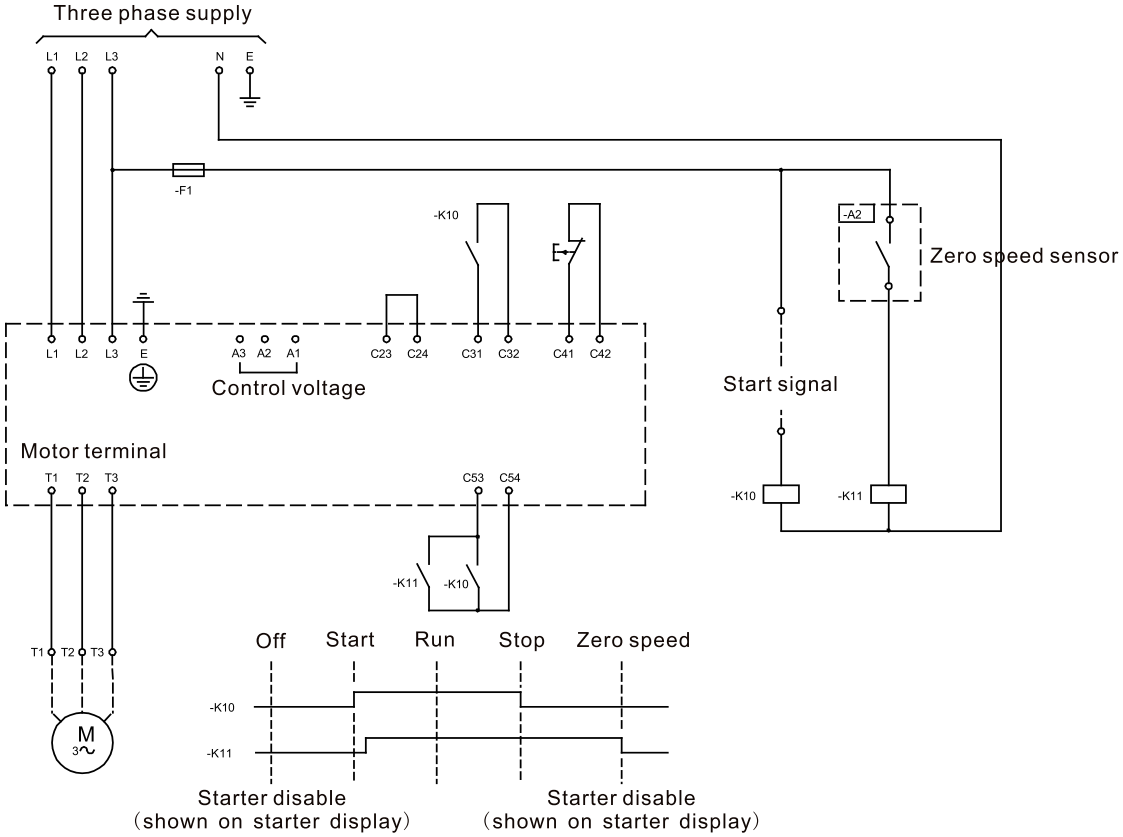

V Soft Braking

For applications with high inertia and/or a variable load, the EM-GB can be configured for soft braking.

In this application the EM-GB is employed with forward run and braking contactors. When the EM-GB receives a start signal (pushbutton S1), it closes the forward run contactor (K1) and controls the motor according to the programmed primary motor settings.

When the EM-GB receives a stop signal (pushbutton S2), it opens the forward run contactor (K1) and closes the braking contactor (K2) after a delay of approximately 2-3 seconds (KT1). K12 is also closed to activate the secondary motor settings, which should be user programmed for the desired stopping performance characteristics.

When motor speed approaches zero, the zero speed sensor (A2) stops the soft starter and opens the braking contactor (K2).

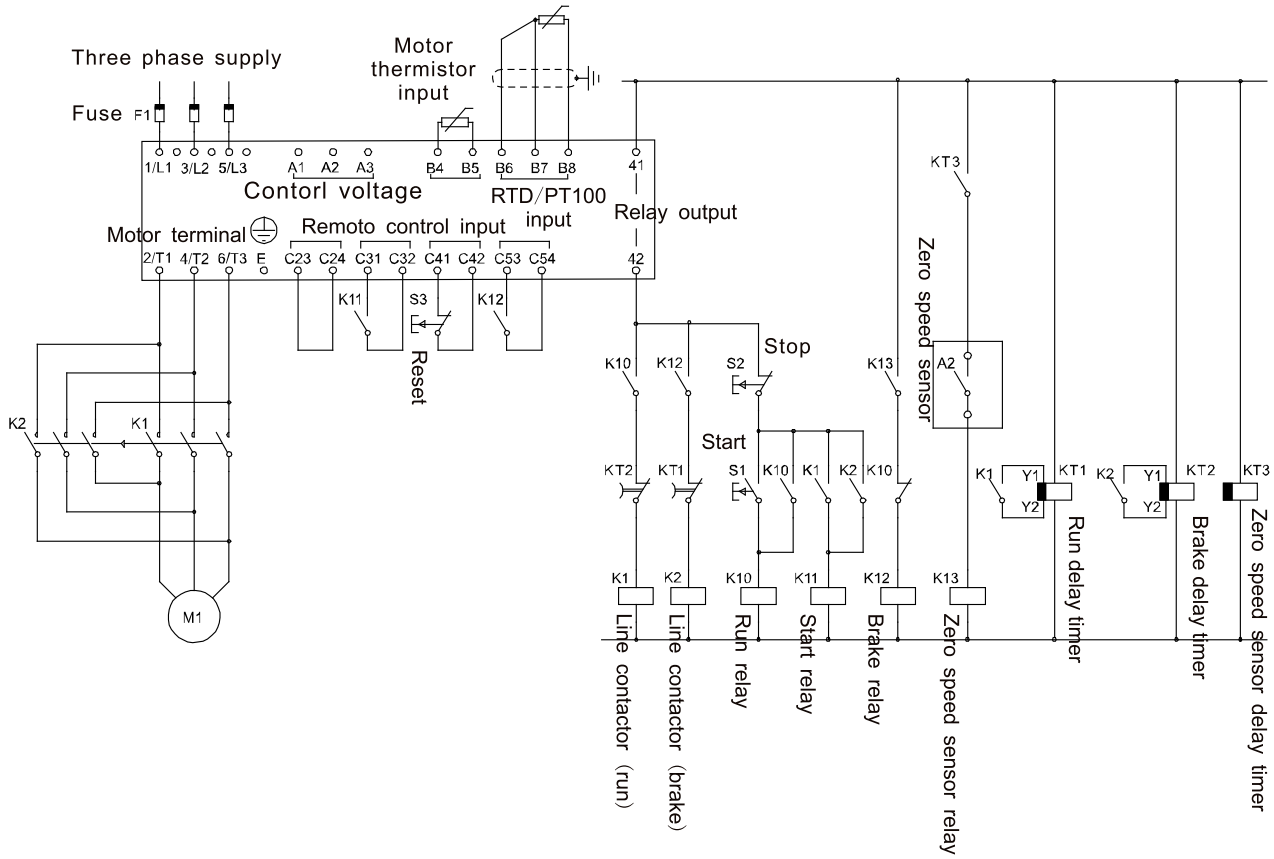

The K3T timer is only required if the zero speed sensor is the type that performs a self-test upon power-up and momentarily closes the output relay.

Parameter settings:

Parameter 6A Input A Function (terminals C53, C54)

- Select 'Motor Set Select' - assigns Input A for Motor set selection.
- Set starting performance characteristics using the primary motor set.
- Set braking performance characteristics using the secondary motor settings.

Parameter 7G Relay C Function

- Select 'Trip' - assigns Trip function to Relay Output C.

NOTE: If the EM-GB trips on supply frequency (parameter 16F Frequency) when the braking contactor K2 opens, modify the frequency protection settings.

VI Two-Speed Motor

The EM-GB can be configured for control of dual speed Dahlander type motors, using a high speed contactor (K1), low speed contactor (K2) and a star contactor (K3).

NOTE: Pole Amplitude Modulated (PAM) motors alter the speed by effectively changing the stator frequency using external winding configuration. Soft starters are not suitable for use with this type of two-speed motor.

When the soft starter receives a high speed start signal, it closes the high speed contactor (K1) and star contactor (K3), then controls the motor according to the primary motor settings.

When the soft starter receives a low speed start signal, it closes the low speed contactor (K2). This closes Input A and the EM-GB controls the motor according to the secondary motor settings.

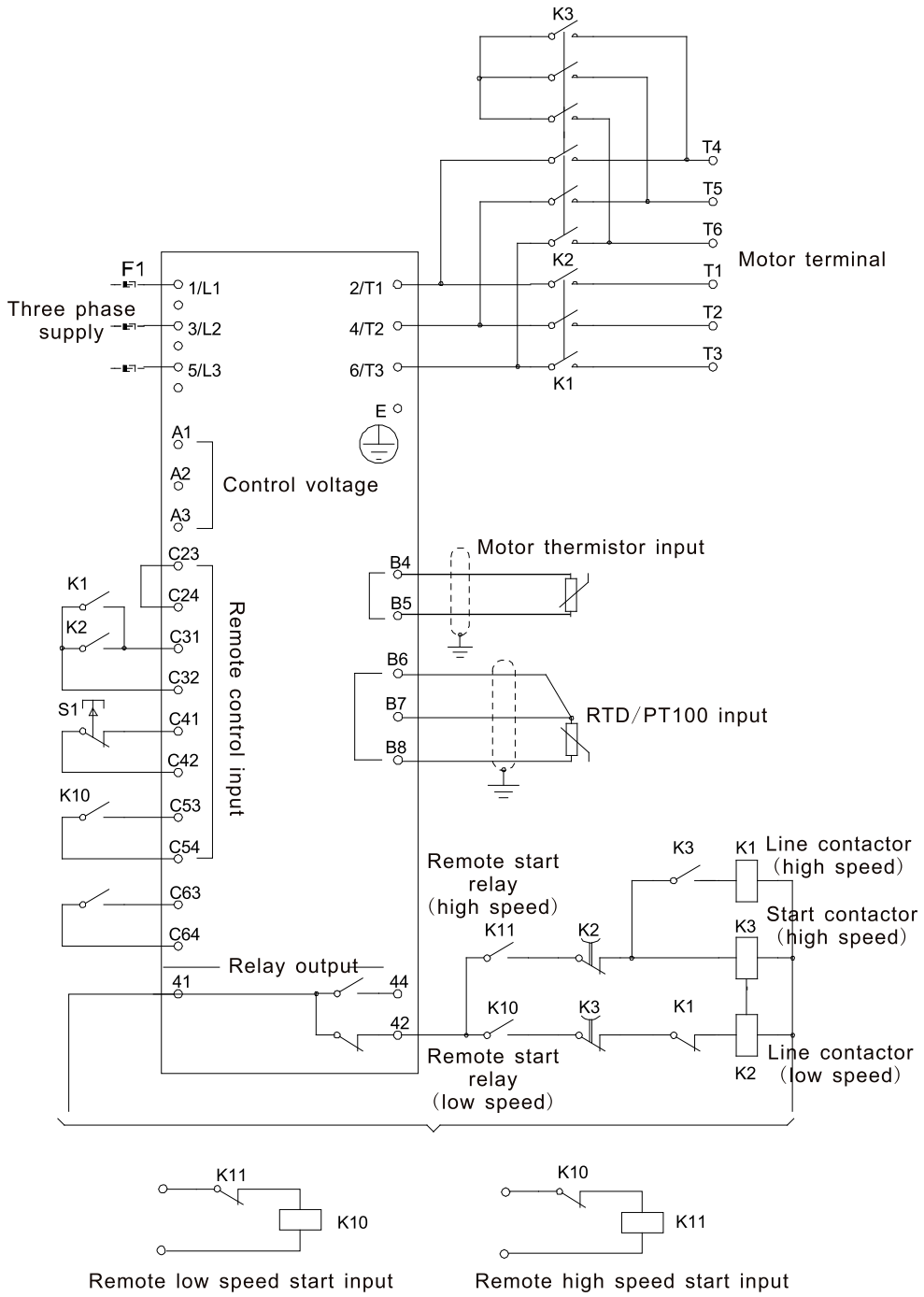

NOTE:

- Contactors K2 and K3 must be mechanically interlocked.
- If the EM-GB trips on supply frequency (parameter 16F Frequency) when the high-speed start signal (9) is removed, modify the frequency protection settings.

Parameter settings:

Parameter 6A Input A Function (terminals C53, C54)

- Select 'Motor Set Select' - assigns Input A for Motor set selection.
- Set high speed performance characteristics using the primary motor settings.
- Set low speed performance characteristics using the secondary motor settings.

Parameter 7G Relay C Function

- Select 'Trip' - assigns Trip function to Relay Output C.

VII Slip-Ring Motor

The EM-GB can be used to control a slip-ring motor, using rotor resistance.

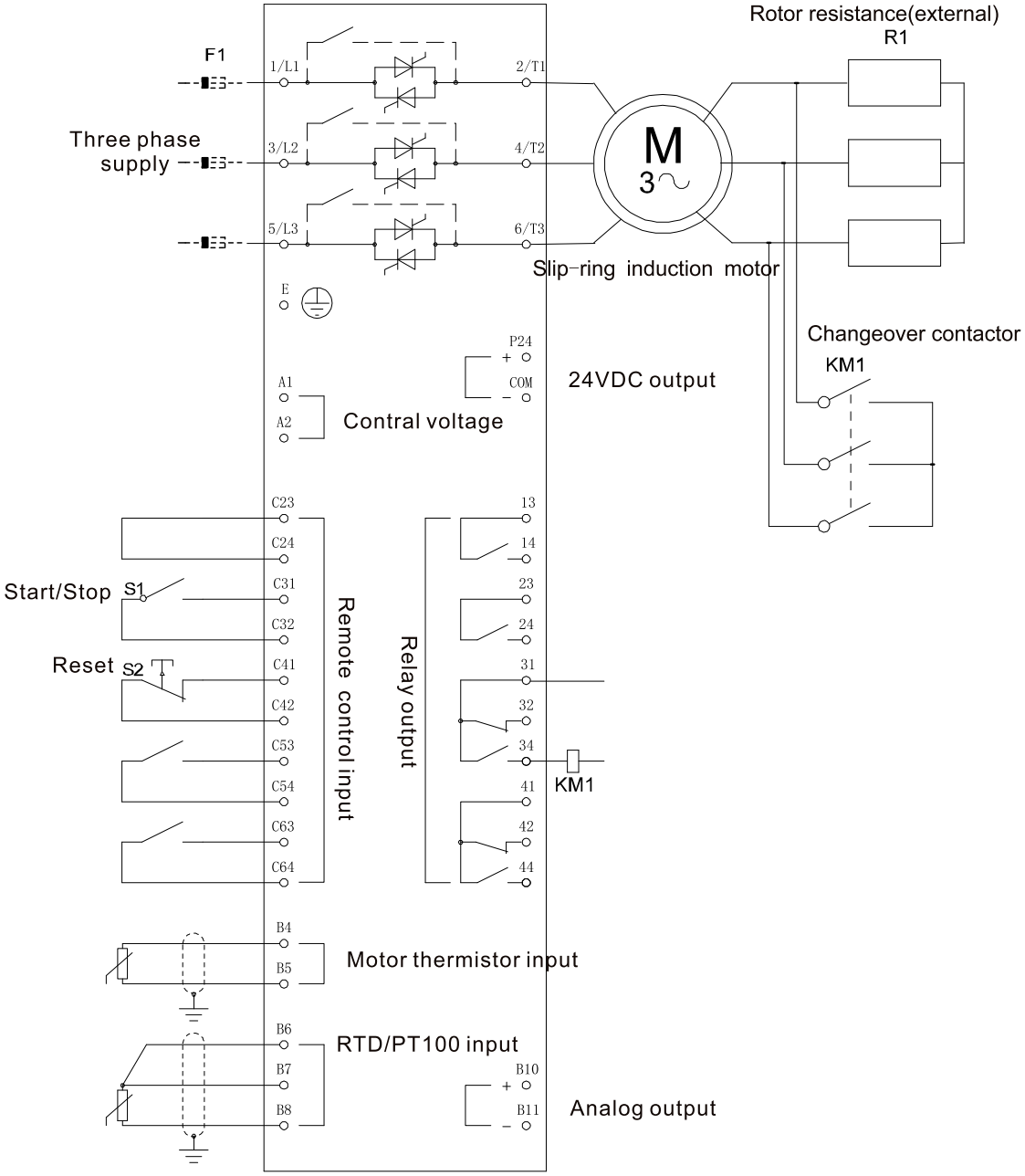

Commissioning

1. Configure the EM-GB as follows:

Parameter settings:

Parameter 7D Relay B Function

- Select 'Changeover contactor'

Parameter 7E Relay B On Delay

- Set this to the maximum time (5m:00s).

Parameter 12A Motor Data-1 Ramp

- Select 'Dual Ramp' (for slip-ring induction motor control)

Parameter 12C Changeover Time

- Default setting is 150 milliseconds. Set this to a value just greater than the changeover contactor (KM1) pole closing time.

Parameter 12D Slip Ring Retard

- Default setting is 50%. Set this parameter to a value which is high enough to cause the motor to instantly accelerate once the rotor resistance (R1) has been bridged out and low enough to avoid a motor current pulse.

2. Start the motor under normal load conditions and record the time it takes to reach a constant speed with external rotor resistance (R1) in the circuit. Stop the motor soon after a constant speed has been reached. Change parameter 7E to the recorded time value.

3. Start the motor under normal load conditions and monitor the motor speed behaviour and motor current when the changeover contactor (KM1) switches in to short-out the rotor resistance (R1).

If the motor does not accelerate immediately after changeover, increase the setting of parameter 12D.

If there is a pulse in motor current immediately after changeover, reduce the setting of parameter 12D.

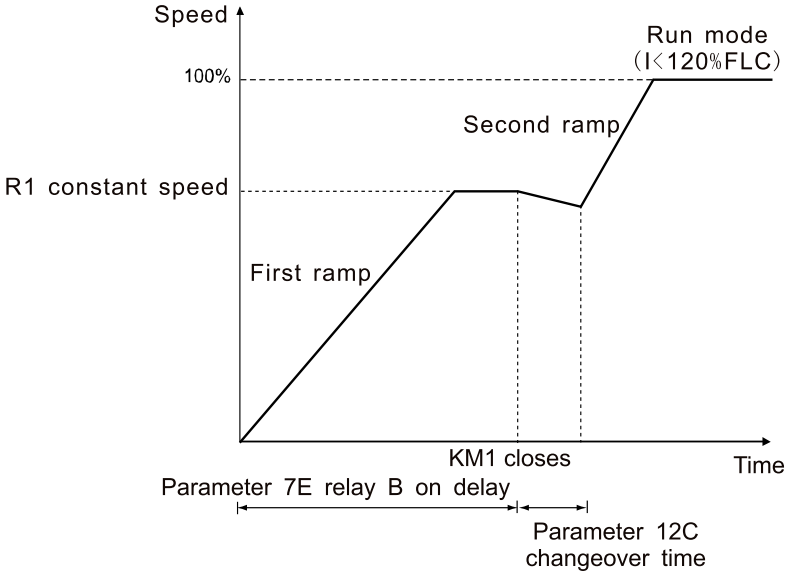

NOTE: For this installation to function correctly, only use the primary motor settings with constant current start method (parameter 2A Start Mode).